Capsul MB3300 MFP

User's Manual

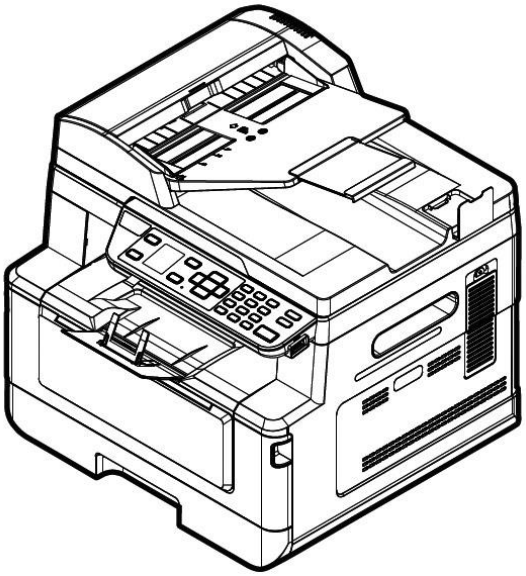

capsul

Trademarks

Capsul® is a registered trademark of XSE Group, Inc.

Microsoft is a U.S. registered trademark of Microsoft Corporation.

Windows 7, Windows 8, and Windows 10, Windows 11 are either registered trademarks or trademarks of Microsoft Corporation in the United States and/or other countries.

Energy Star® is a registered trademark of the U.S. government.

Other brands and product names herein are trademarks or registered trademarks of their respective holders.

Copyright

All rights reserved. No part of this publication may be reproduced, transmitted, transcribed, stored in a retrieval system, or translated into any language or computer language, in any form or by any means, electronic, mechanical, magnetic, optical, chemical, manual, or otherwise, without the prior written permission of Capsul.

Material scanned by this product may be protected by governmental laws and other regulations, such as copyright laws, the customer is solely responsible for complying with all such laws and regulations.

Warranty

The information contained in this document is subject to change without notice.

Capsul makes no warranty of any kind with regard to this material, including, but not limited to, the implied warranties of fitness for a particular purpose.

Capsul shall not be liable for errors contained herein or for incidental or consequential damages in connection with the furnishing, performance, or use of this material.

Notice

Important

- Do not make copies of any item for which copying is prohibited by law.
- Copying the following items are normally prohibited by the local law:
  Bank bills, revenue stamps, bonds, stock certificates, bank drafts, checks.

Federal Communications Commission (FCC) compliance information statement Part 15

This equipment has been tested and found to comply with the limits for a Class B digital device, pursuant to Part 15 of the FCC Rules. These limits are designed to provide reasonable protection against harmful interference in a residential installation. This equipment generates, uses and can radiate radio frequency energy and, if not installed and used in accordance with the instructions, may cause harmful interference to radio communications.
However, there is no guarantee that interference will not occur in a particular installation. If this equipment does cause harmful interference to radio or television reception, which can be determined by turning the equipment off and on, the user is encouraged to try to correct the interference by one of the following measures:

- Reorient or relocate the receiving antenna.
- Increase the separation between the equipment and receiver.
- Connect the equipment into an outlet on a circuit different from that to which the receiver is connected.
- Consult the dealer or an experienced radio/TV technician for help.

This device complies with Part 15 of the FCC Rules. Operation is subject to the following two conditions: (1) This device may not cause harmful interference, and (2) this device must accept any interference received, including interference that may cause undesired operation.

CE

European Union Regulatory Notice

Products bearing the CE marking comply with the following EU Directives:

- Low Voltage Directive 2014/35/EC
- EMC Directive 2014/30/EC
- Restriction of the use of certain hazardous substances (RoHS) Directive 2011/65/EU
- RED (Radio Equipment Directive) (2014/53/EC)

This product satisfies the Class B limits of EN55032, EN55035, and safety requirements of EN62368-1.

*This machine is certified as Class 1 Laser/LED product.

FCC Caution:
Any changes or modifications not expressly approved by the party responsible for compliance could void the user's authority to operate this equipment.

This device is intended only for OEM integrators under the following conditions:
1) The antenna must be installed such that 20 cm is maintained between the antenna and users.
2) The transmitter module may not be co-located with any other transmitter or antenna.

IMPORTANT NOTICE:
FCC Radiation Exposure Statement:

This equipment complies with FCC radiation exposure limits set forth for an uncontrolled environment. This equipment should be installed and operated with minimum distance 20cm between the radiator & your body. To maintain compliance with FCC RF exposure compliance requirements, please avoid direct contact to the transmitting antenna during transmitting.

IC Notice:
Operation is subject to the following two conditions:
1) This device may not cause interference and
2) This device must accept any interference, including interference that may cause undesired operation of the device.

IMPORTANT NOTE:
IC Radiation Exposure Statement:
This equipment complies with IC radiation exposure limits set forth for an uncontrolled environment. End users must follow the specific operating instructions for satisfying RF exposure compliance. This equipment should be installed and operated with minimum distance 20cm between the radiator & your body.

This transmitter must not be co-located or operating in conjunction with any other antenna or transmitter.

Règlementd' Industry Canada

Les conditions de fonctionnement sont sujettes à deux conditions:

(1) Ce périphérique ne doit pas causer d'interférence et.

(2) Ce périphérique doit accepter toute interférence, y compris les interférences pouvant perturber le bon fonctionnement de ce périphérique.

When this printer has no operation for an extended period of time

Note: If the printer is idle for a period of time (for example, overnight), turn off the printer with the power switch. If the printer is idle for a longer period of time (such as holidays), unplug the power cord from the electrical outlet to prevent danger.

Take care to remove the paper from the paper tray and store it in the wrapper to prevent the paper from getting wet.

Safety Information

When using this equipment, the following safety precautions should always be followed.

Safety During Operation

In this manual, the following important symbols are used:



WARNING:
Indicates potentially hazardous situations, which if instructions are not followed, could result in death or serious injury.



CAUTION:

Indicates a potentially hazardous situation which, if instructions are not followed, may result in minor or moderate injury or damage to property.

Important:
Indicates operational requirements and restrictions. Please read and follow these instructions to ensure a proper operation and to avoid damage to the machine.

Note:
Indicates further explanation or clarification. Reading this is highly recommended.

The following symbols indicate that the related section includes safety warnings. Specific points of attention are indicated inside the symbol.



[General warning]



[Warning of high temperature]



[Warning of danger of electrical shock]

The following symbols indicate that the related section includes information on prohibited actions. Specifics of the prohibited action are indicated inside the symbol.



[Warning of prohibited action]



[Disassembly prohibited]

The following symbols indicate that the related section includes information on actions which must be performed. Specifics of the required action are indicated inside the symbol.



[Alert of required action]



[Remove the power plug from the outlet]

Installation and the Operating Environment

Warning

Do not install the equipment near direct sun light, heating or air conditioning units. Direct sunlight or high temperature may damage the machine.

Do not install the equipment in a humid or dusty place. If dust or dust adheres to the power plug, clean the plug to avoid fire or electric shock.

Keep the vent hole on the back of the printer at least 10 cm away from the wall to avoid overheating and fire.

Do not place or store the device:

- Outdoors
- Near excessive dirt or dust, water, or heat sources
- In locations subject to shocks, vibrations, high temperature or humidity, direct sunlight, strong light sources, or rapid changes in temperature or humidity

Place the equipment securely on an even, flat surface. Tilted or uneven surfaces may cause mechanical or paper-feeding problems.

Do not locate the device on rackety or aslope tables. Do not locate the device on unstable surface. The device may fall down and this may result in injury.

Place the device close enough to the computer so that the interface cable can easily reach between the device and the computer.

Do not place a coffee cup, vase, or other liquid-filled container on the machine. Spillage can damage the machine's electrical parts and insulation.

Make good use of the recycled paper while printing.

Caution

Place the device in an independent, well-ventilated area.

Place the device in a place with good environmental conditions. Operating the machine beyond the recommended temperature and humidity may cause an electrical fire.

Do not place heavy objects on the unit. It may cause unbalance and the device may fall down. This may result in injury.

Do not place the device in any position that may obstruct the output of the unit, as it may cause paper jams.

Safety Information During Operpation

Warning

To prevent fires, do not use flammable sprays near the machine.



Never attempt to open any fixed cover. Otherwise there is danger of electric shock, fire and laser beam and may cause blindness.



Never disassemble, modify, or attempt to repair the device or device option by yourself, except as specifically explained in the device's documentation. This could cause fire, electrical shock, or injury.



Do not attempt to alter the machine or its parts. Avoid contact with the internal high voltage part or the laser light beam, it may cause electric shock or blindness.



If this product becomes inordinately hot or emits smoke, or unusual odor or noise, immediately turn OFF the power switch, unplug the power cord from the power outlet, and then call your authorized service representative. If you keep on using it as is, a fire or electrical shock could result.



Take care not to drop paper clips, staples, or any other metal objects into the machine.



The inside of this product has areas subject to high temperature, which may cause burns. When checking the inside of the unit for malfunctions such as paper mis-feed, do not touch the locations (around the fusing unit, etc.) which are indicated by a "Caution! Hot Surface" caution label.



Under normal conditions the small quantities of ozone gas produced by the machine are harmless. However, if the machine is used for an extended period or within a small room, you should make sure that the area is adequately ventilated. Also ventilate the room if you notice the machine smells after a period of frequent or extended use.



Do not attempt to remove the covers and panels which have been fixed to the product. Some products have a high-voltage part or a LSU beam source inside that could cause an electrical shock or blindness.



Do not modify this product, as a fire, electrical shock, or breakdown could result. If the product employs a LSU printhead, the LSU beam source could cause blindness.



If this product has been dropped or its cover damaged, immediately turn OFF the power switch, unplug the power cord from the power outlet, and then call your authorized service representative. If you keep on using it as is, a fire or electrical shock could result.



Take appropriate emergency measures when the following conditions occur



- When toner gets into your eyes, wash it off with water until your eyes are not painful. If the situation is serious, ask a doctor for treatment.
- When the toner gets on your skin, wash it off with soap and rinse it off.
- When you are in the toner inlet, leave the dust location immediately and rinse with plenty of water.
- When the toner is in the abdomen, spit it out and consult a doctor.

Do not use the device with wet hands.



Unplug the device and the USB cable, and refer servicing to qualified service personnel under the following conditions:



- Liquid has entered the device.
- Object has entered the device.
- The device has been dropped, or the case has been damaged.
- The device does not operate normally (i.e. appearance of smoke, strange smell, odd noise, etc.), or exhibits a distinct change in performance.。



Caution

When there is paper jam inside the machine, be sure to remove it thoroughly. The remaining paper in the machine may cause a fire. When the paper is attached to an invisible or difficult-to-see area, do not remove it by force to avoid injury and contact the service personnel or dealer for help.



The temperature inside of the machine may be very hot. When the paper jam is released, note any warning labels and do not touch it to avoid burns. It is recommended to clear the jam after the machine has cooled down.



When clearing paper jams, refer to the instructions in this manual.



When using a large number of copies of the machine for a long time, keep the indoor air flowing. Otherwise you may feel a headache.



Unplug the device's power cord and USB cable before cleaning.



About the Consumables



Caution

Do not unpack the consumables and store the machine's consumables in any of these locations:



- Outdoors
- Near excessive dirt or dust, water, or heat sources
- In locations subject to shocks, vibrations, high temperature or humidity, direct sunlight, strong light sources, or rapid changes in temperature or humidity

Do not throw the toner cartridge into the fire. After the toner remaining in the crucible comes into contact with the fire, the powder may explode and cause personal injury.



Caution

Do not discard the discarded toner cartridges. Please put the used waste toner cartridges in the supplied plastic bags and return them to the dealer or service personnel. (For the customer service locations around the company, please refer to our website.). The latter will recycle the used toner cartridge in accordance with relevant regulations.



The used consumables must be disposed of properly and in accordance with local environmental regulations, or disposed of by the company's designated dealer.



Safety Information When using power cord and the USB cable

Warning

Plug the power cord securely into the outlet. Do not touch the pins of the power cord plug with any metal objects as they may touch dangerous voltage points or short circuit. This can cause fire, electric shock or injury. Failure to do so may result in a fire or electric shock.



Before disconnecting the plug, turn the machine off. Make sure your hands are dry. Hold the plug itself, not its cord, when disconnecting it from the receptacle.



Do not share the power with other high-powered devices, as this may result in fire or electric shock.



Do not use extension cords as this may result in fire or electric shock.



Always use the correct AC power source. For future transportation and handling, please keep all packaging materials for this product.



Use only the USB cable that came with your device and avoid abrasions, cuts, fraying, crimping, and kinking. Using any other USB cable could cause fire, electrical shock, or injury.



Do not store the cables in the following locations:

- Outdoors
- Near excessive dirt or dust, water, or heat sources
- In locations subject to shocks, vibrations, high temperature or humidity, direct sunlight, strong light sources, or rapid changes in temperature or humidity



Keep the supplied USB cable, etc., in a location that is out of reach of children to avoid the risk of injury.



Please put the packaging materials such as the supplied plastic bags in a place that children cannot obtain or discard them to avoid the risk of suffocation.



Caution



If you are not using the device for a long time, remove the USB cable from the connector.

This product has a power-saving mode and a standby mode. The zero-energy state can be achieved only when the product is connected without any external input power.



At least every year, please disconnect the power cord from the wall outlet to check whether the power cord is exposed, damaged, cracked, dent, hot, pin deformation or any burnt marks. If these conditions exist, please do not use the power cord again and contact the authorized service personnel or dealer.

Make sure the power cord is plugged into a grounded electrical outlet, otherwise it may cause a fire or electric shock.

Be sure to fully plug the power cord into a wall outlet. Failure to completely insert may cause unstable connections and heat build-up, creating an unsafe condition.



When disconnecting the power cord from the wall outlet, be sure to pull the plug, not the power cord, as this may damage the power cord and cause a fire or electric shock.

To repair the machine, be sure to disconnect the power cord from the wall outlet.

Make sure the power cord is firmly secure and will not trip over.

SAFETY INSTRUCTION

This printer is a page printer which is operated by means of a LSU (Laser Scanning Unit). There is no possibility of danger from the LSU, provided the printer is operated according to the instructions in this manual. Since radiation emitted by the laser beam is completely confined within protective housings and external covers, the laser beams cannot escape from the machine during any phase of user operation.

Disposal of Waste Equipment by Users in Private Union



This symbol on the product or on its packaging indicates that the product can not be disposed of with your other household waste. Instead it should be sent to appropriate facilities for recovery and recycling in an effort to protect human health and the environment. Fore more information about where you can drop off your waste equipment for recycling, please contact your local city office, your household waste disposal service or the shop where you purchased the product.

Table of Contetents

1. Overview 1
   - Introduction 1
   - Features 1
   - The External View 3
   - Package Contents 5
   - Control Panel 6
2. Installing Your Machine 9
   - Precautions 9
   - Operational Space 9
   - Removing the Protective Tapes of the Machine 10
   - Removing the Packing Materials ..... Error! Bookmark not defined.
   - Removing the Spacers 12
   - Removing the Tapes of the Toner Cartridge 13
   - Install the Paper Stopper 17
   - Loading The Main Input Tray 18
   - Loading the Manual Tray 23
   - Connecting to Power 26
   - Turning On The Machine 26
   - Connecting to a Wired Network 27
   - Setting the Product's Date and Time 28
   - Installing the Scanner/Printer (Windows) 29
   - Specifying the Product's SMTP Server 36
   - Creating a File Destination on the Network 38
   - Creating Your Address Book 40
3. Operation 41
   - Loading Paper 41
   - Placing Document(s) in the ADF 43
   - Placing Document(s) on the Glass 44
4. Setting up and Managing Destinations 59
   - Setting up Your Address Book 59
   - Setting up Your File Destinations 64
5. Customizing the Product's Settings 66
   - Customizing System's Settings via the Control Panel 66
   - Customize System's Settings via the Embedded Web Page 67
   - Setting Items to be Customized 68
   - Updating The Product's Firmware 77

6. Configuring the Printer Driver 78
Displaying the Printer Driver Properties Dialog Box (Windows) 78
Configuring Printer Driver Settings 80
7. Printing Documents from a Mobile Device 92
Making Preparation 92
Connecting to a Wireless Network via the Network Setup Tool 93
Printing Your File from a Android Mobile Device 95
Printing Your File from a iOS Mobile Device 98
8. Scanning From Your Computer 99
System Requirements ..... Error! Bookmark not defined.
Operating Steps ..... Error! Bookmark not defined.
9. Maintaining the Product 107
Cleaning The Glass 107
Cleaning the ADF 108
Cleaning the Pad in the Cassette 109
Cleaning the Drum Unit 110
Cleaning the Paper Path 112
Cleaning the IR Sensors 113
Cleaning the Paper-In Sensors 114
Clearing the ADF Paper Jam 115
Replacing the Snap-in Pad Module 116
Replacing The Toner Cartridge 117
Replacing The Drum Unit 122
11. Troubleshooting 125
Monitoring Your Printer Using Printer Status Monitor 125
Clearing A Warning or Error Message 128
Technical Support ..... Error! Bookmark not defined.
12. Specifications 138

1. Overview

Introduction - A Better Approach to Workplace Technology

Congratulations on your purchase of the Capsul MB3300. This MFP integrates scan, copy, print, and email functions into one unit. The product supports document size up to legal size.

In addition, through the network port at the back of the machine and integrated WiFi cad, the product is able to work as a network printer. Through the color LCD screen and the easy-to-use control panel, making a copy is easy just as you normally do on a regular copier.

"The product" refers to the following MFP models. The following table shows the differences between each model:

- **Auto Document Feeder:** Auto Document Feeder allows 1-Sided scanning and copying for multi-page document.
- **Wi-Fi** : With an optional Wi-Fi USB dongle connected to the USB port, the product allows you to connect your computer through wireless connection. Plus, if you have installed a MB App on your mobile devices, the product allows you to scan and receive the scanned image from a mobile device.

Features

Various Advanced Copy Features
The product is designed with various advanced copy features which include ID card copy, paper saver to copy multi-page document onto a single sheet, etc.

Printing:
When the product is connected to a computer through the USB interface or a network port, it is able to perform 2-Sided printing through a computer on the network.

Scan-to-e-mail, USB, FTP or CIFS
The product offers an unprecedented document delivery technology, transmitting paper documents electronically over the internet to various destinations including e-mail addresses, the MFP's memory, an USB flash drive (supports partition type FAT16/FAT32), ftp (file transfer protocol) servers, or someone else's computer on the network. The new way to distribute documents is faster, more cost effective, and safer than any traditional methods such as mail, or courier.

Scanning:
When the product is connected to a computer and the scanner driver is installed onto a connected computer through the USB port, it can be used as a full scanner to capture photos or documents into your computer.

Remote Device Management through Embedded Web Page

The product provides an embedded web page to let the system administrator remotely monitor the product by managing an address book, checking the supplies status of toner cartridge.

The External View

The Front View

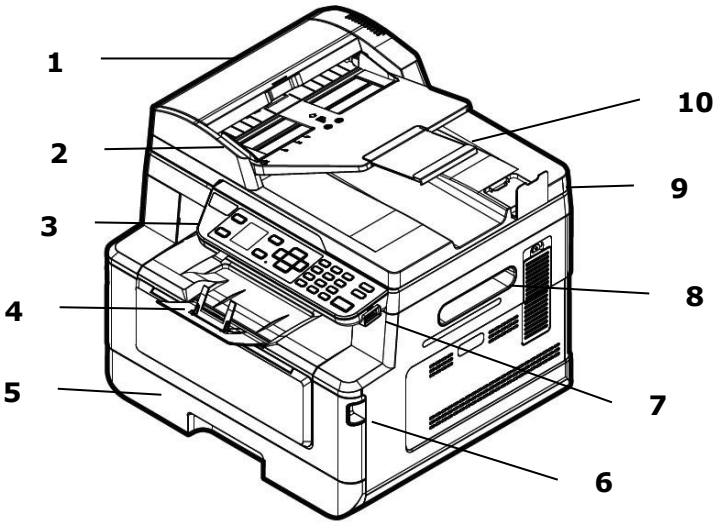

1. Auto Document Feeder	6. Handle of the Front Cover
2. Paper Guide	7. USB Port (USB Flash Drive, FAT16/FAT32)
3. Control Panel	8. Handle of the Side Cover
4. Paper Stopper	9. Document Cover
5. Main Paper Tray	10. Extension

The Rear View

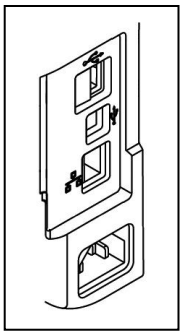

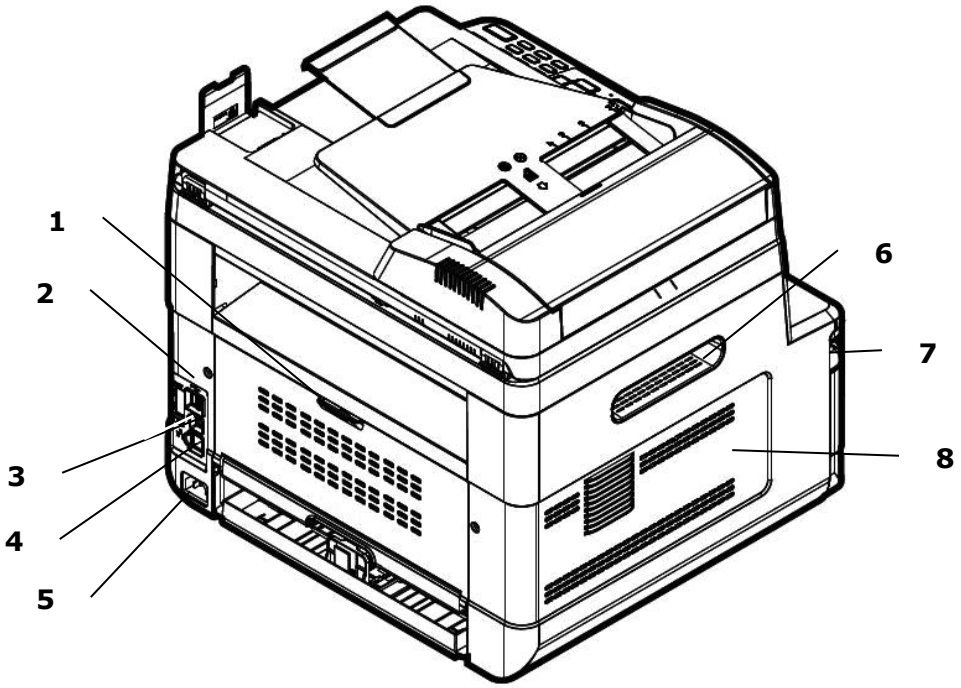

1. Handle of the Rear Cover	5. Power Receptacle
2. USB Port (Type A)	6. Handle of Side Cover
3. USB Port (Type B, to PC)	7. Handle of Front Cover
4. Network Port	8. Side Cover

Package Contents

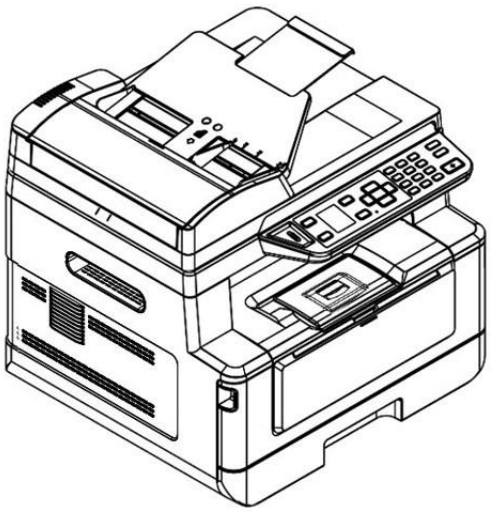 Main Unit	 CD-ROM (Including Driver, and User's Manual)
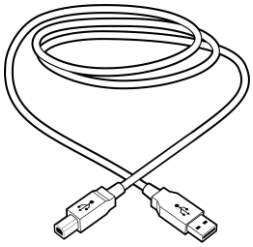 USB Cable	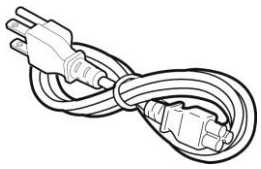 Power Cord

Control Panel

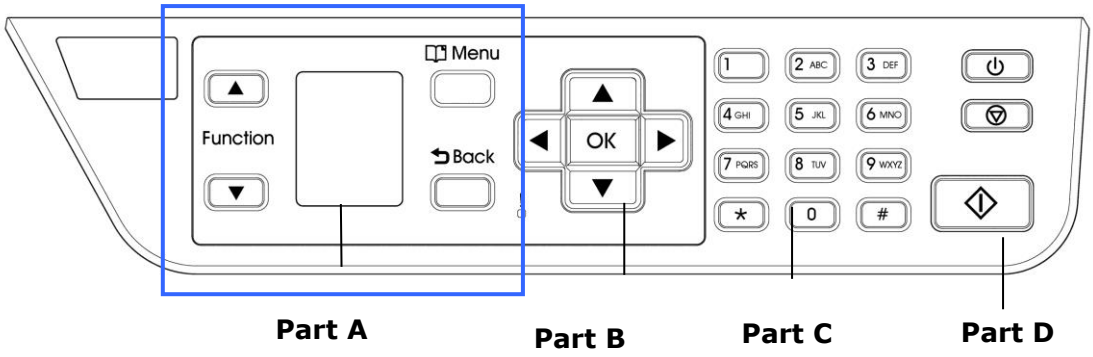

Part A:

Function ▲/▼	Used to choose a working mode.
LCD screen	Used to display information and provide access to the product's functions.
Menu	Used to enter the Menu mode.
Back ⮌	Used to go back to the previous level.

Part B: Function Keys

◀	• Used to scroll backwards through menu selection. • Used to delete text while entering a text.
▶	• Used to scroll forwards through menu selection. • Used to add a space from the right while entering a text.
OK	Used to confirm a selection in Menu mode.
▲ / ▼	Used to display or select an option.
LED Light	Used to indicate the machine's status.

Part C: Numeric/Character Keypad

Used to enter copy quantity.

Part D: Start Button & Other Buttons

Used to choose the Start button to perform the copy, scan, fax, e-mail, or filing function.

Power: Press to turn on the machine.
Stop/Cancel: Press to pause a current job.
Start: Press to start a copy, scan-to, or other job.

LCD Screen and Status Bar

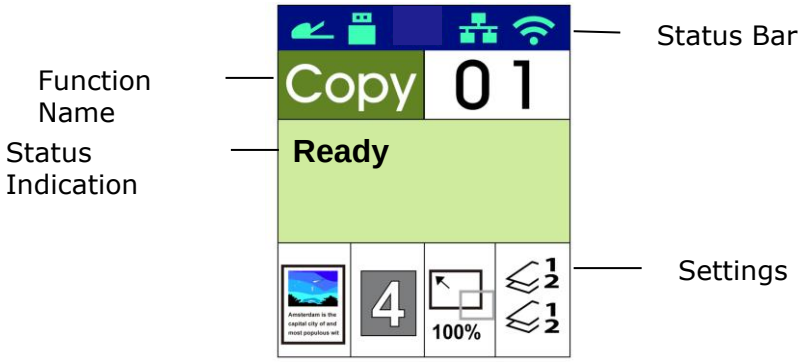

Status Bar

Icon	Name	LED Light Color/Status Indication	
	Wi-Fi Mode		A green icon indicates connection successful
			A gray icon indicates obtaining IP
		No Display	No Wi-Fi USB dongle
	Wi-Fi AP Mode		A green icon indicates connection successful
			A gray icon indicates obtaining IP
		No Display	No Wi-Fi USB dongle

<table>
<tr><td></td><td>Ethernet Mode</td><td>
<table>
<tr><td></td><td>A green icon indicates connection successful</td></tr>
<tr><td></td><td>A gray icon indicates no connection of the wired network cable.</td></tr>
<tr><td></td><td>An Auto IP address has been given to the device since DHCP server is not working. Yet network connection is only limited to Local Area Network (LAN).</td></tr>
</table>
</td></tr>
<tr><td>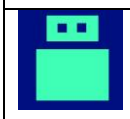</td><td>USB Mode</td><td>
<table>
<tr><td></td><td>A green icon indicates connection successful</td></tr>
<tr><td></td><td>A gray icon indicates no connection.</td></tr>
</table>
</td></tr>
<tr><td></td><td>Auto Document Feeder Mode</td><td>
<table>
<tr><td></td><td>A green icon indicates there is paper in the Auto Document Feeder.</td></tr>
<tr><td></td><td>A white icon indicates no paper in Auto Document Feeder.</td></tr>
<tr><td></td><td>A gray icon indicates no connection.</td></tr>
</table>
</td></tr>
<tr><td></td><td>High Temperature</td><td>Temperature inside the printer is too high. Each rear-side printing will be stopped for 6 seconds and then continued printing.

After the machine has been idled for 30 minutes and the temperature has dropped to normal degrees, the [High Temperature] icon will then disappear.</td></tr>
</table>

2. Installing Your Machine

Precautions

- Do not install the equipment near heating or air conditioning units.
- Do not install the equipment in a humid or dusty place.
- Place the equipment in a separate area with good ventilation.
- The equipment is equipped with both the power-saving and standby modes.

  The equipment can not achieve zero energy consumption state until it is not connected to any external power supply.
- Be sure to use the correct AC power supply.
- Retain the box and packing materials for shipping purposes.

Operational Space

Please reserve the following operation space.

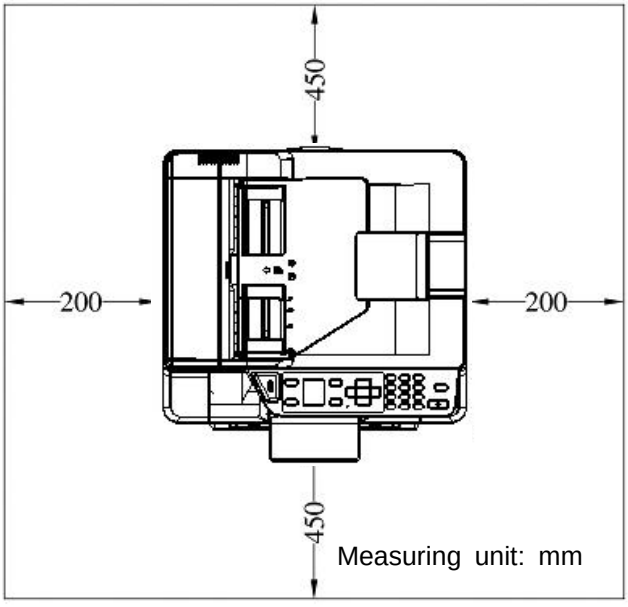

Machine dimension: 404 x 380 x 366 mm (WxDxH)

Removing the Protective Tapes of the Machine

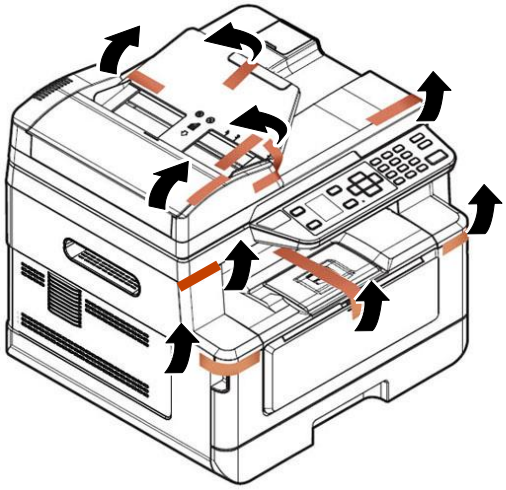

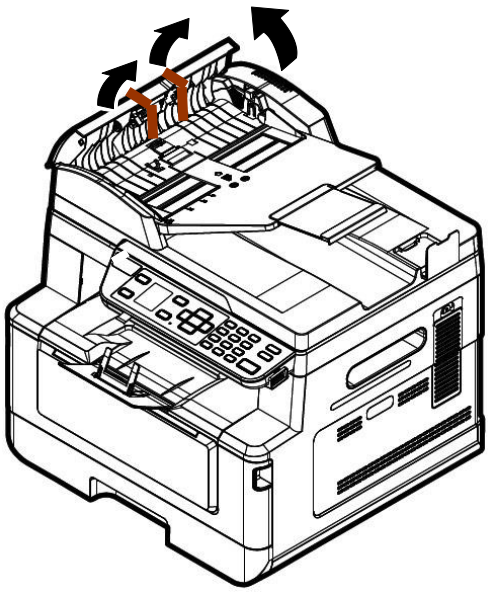

Open the Auto Document Feeder and remove the tapes

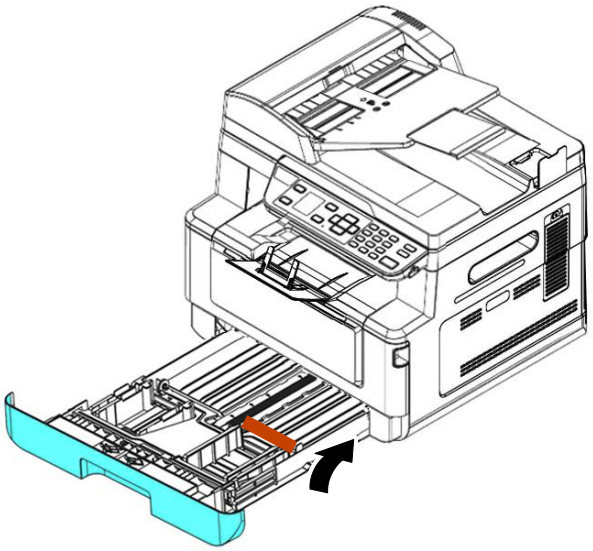

Pull the Paper Tray and remove the tape

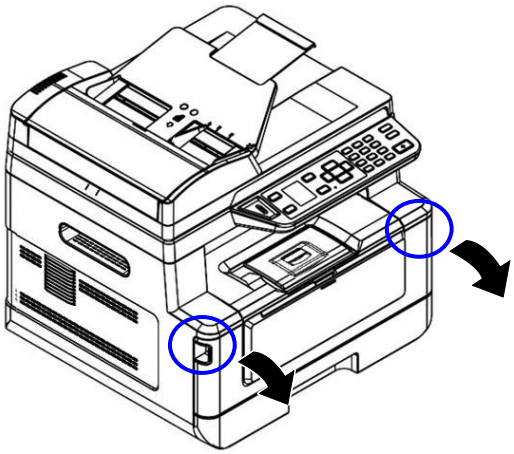

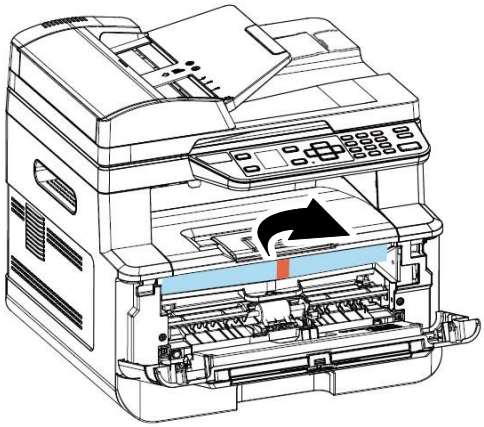

Open the front cover and remove the packing material.

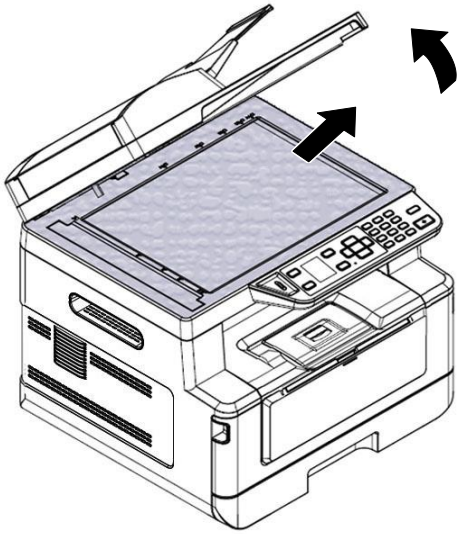

Open the document cover and remove the packing material.

Removing the Spacers

1. Open the rear cover.
2. Remove the spacers on both sides of paper path as shown. The spacers are designed to protect the printer during transportation.

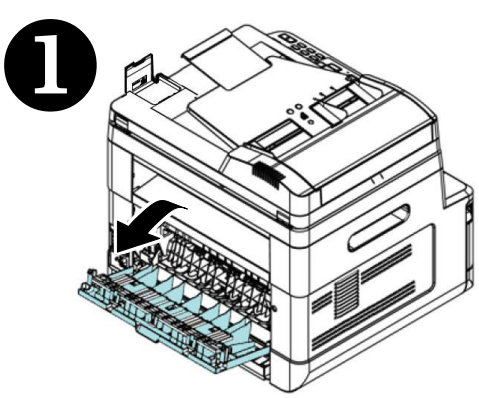

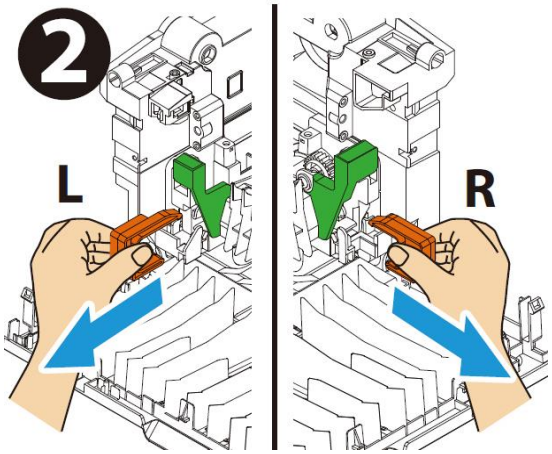

Removing the Tapes of the Toner Cartridge

Warning!

- Be careful not to inhale toner.
- If toner gets on your clothing or other fabric, wipe off the toner with a dry cloth. Wash the items in cold water and air dry.
- To avoid print quality problems, DO NOT touch the toner rollers.
- To prevent the toner cartridge from damage, do not expose it more than several minutes.

1. Open the front cover by pulling the handles on both sides as shown.

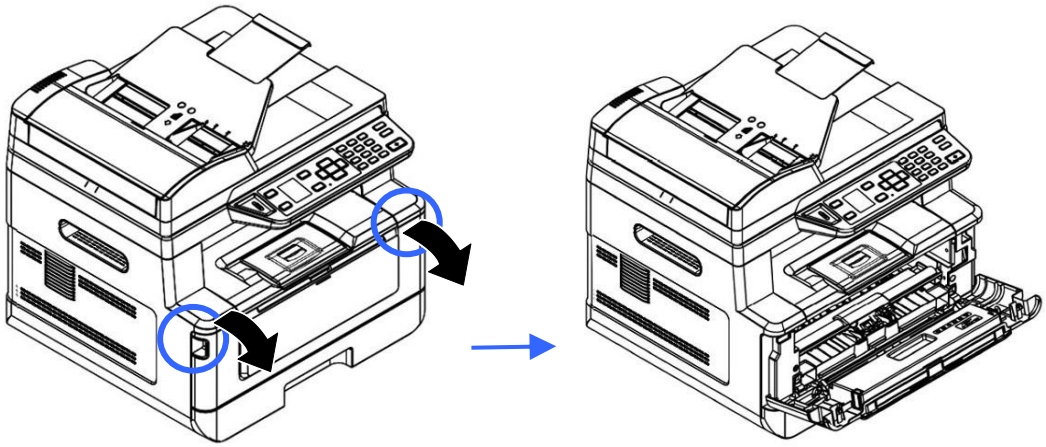

2. Hold the handle of the drum unit and pull it out as shown.

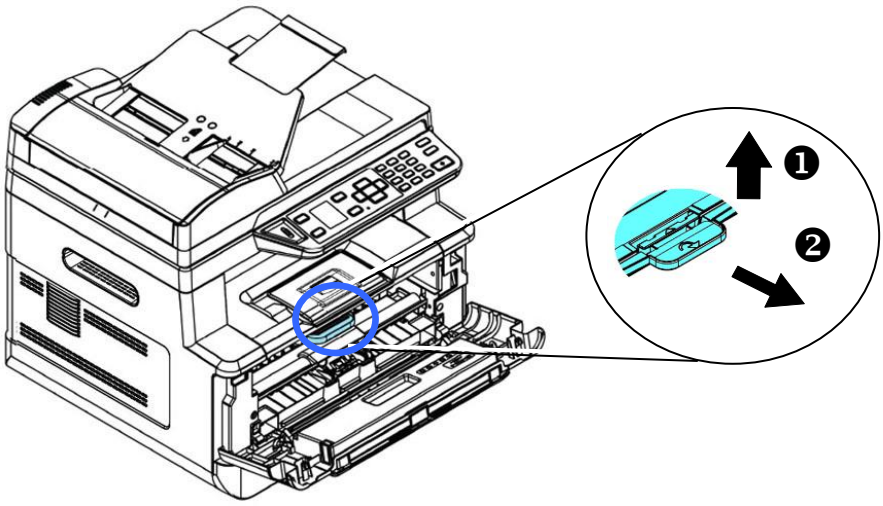

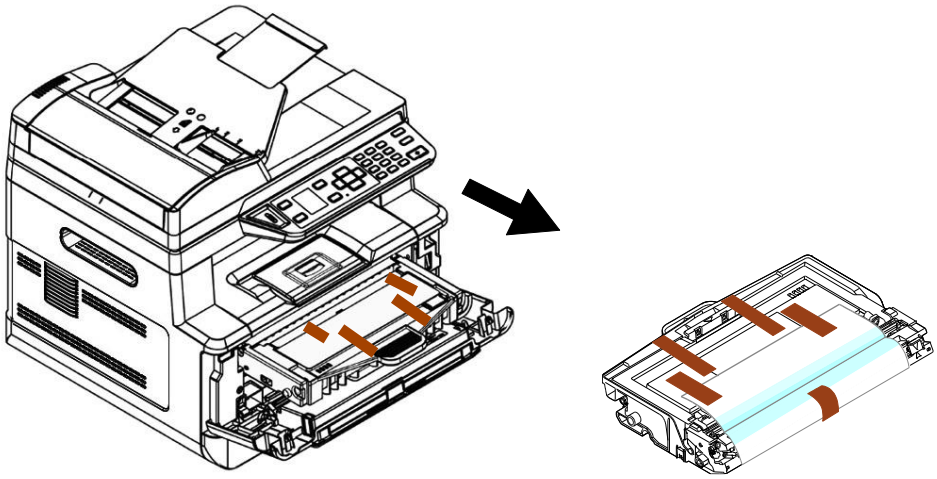

3. Remove the protective tape and label on the drum unit.

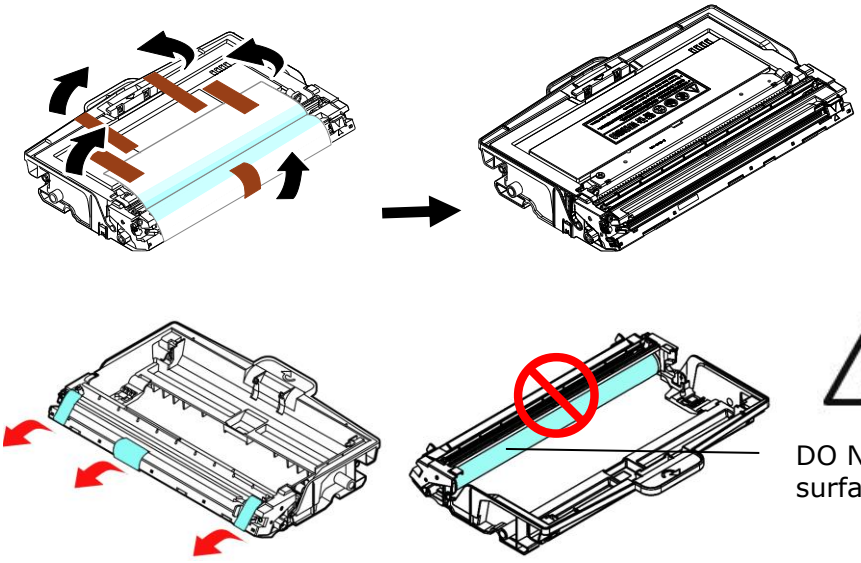

DO NOT touch the surface of the drum.

Important!

- DO NOT touch the drum surface since the fingerprints or other marks may affect the print quality.
- DO NOT expose the drum unit under light for a few minutes. Install the drum unit as soon as the package is opened.

4. Pull out the protective seal of the toner cartridge until it is completely removed.

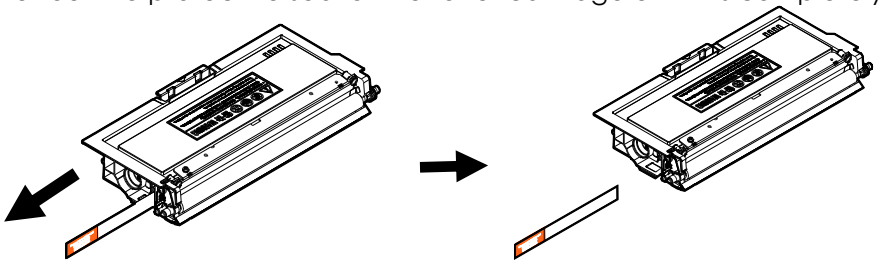

5. Tilt the new toner cartridge up and down and then right and left 10 times to distribute the toner evenly inside the toner cartridge.

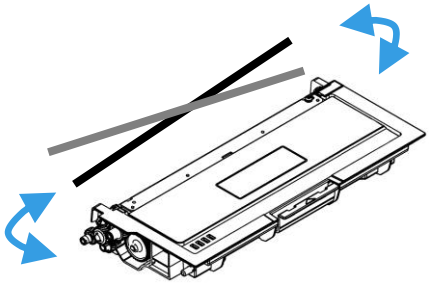

6. Install the toner cartridge to the drum unit until you hear it lock into place.

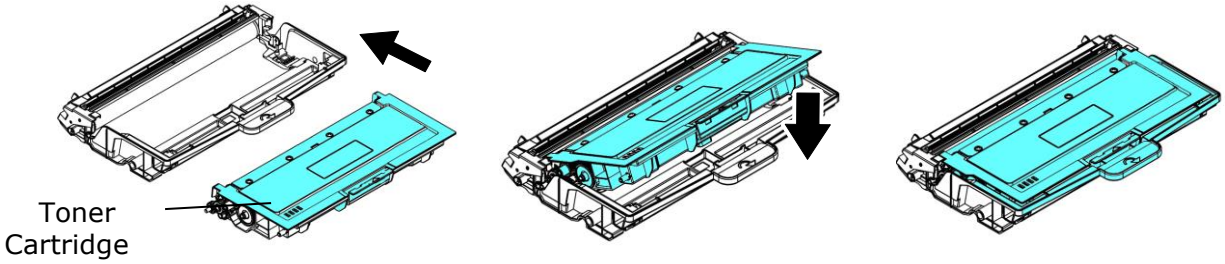

7. Hold the handle of the drum and toner cartridge assembly and insert the assembly to its original place.

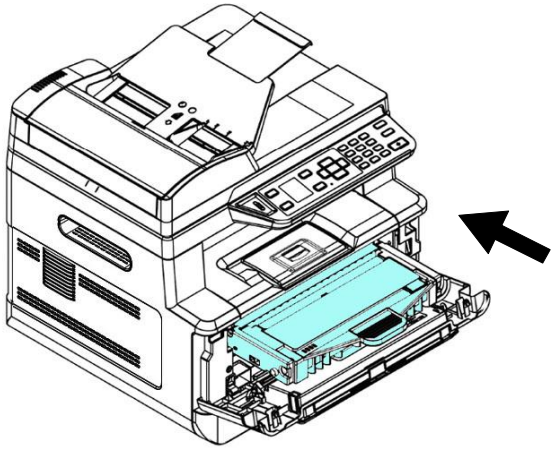

8. Press down the toner cartridge to fix it into place.

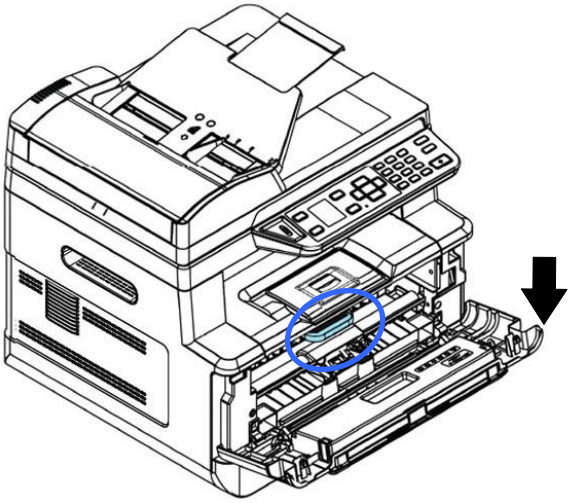

9. Close the front cover.

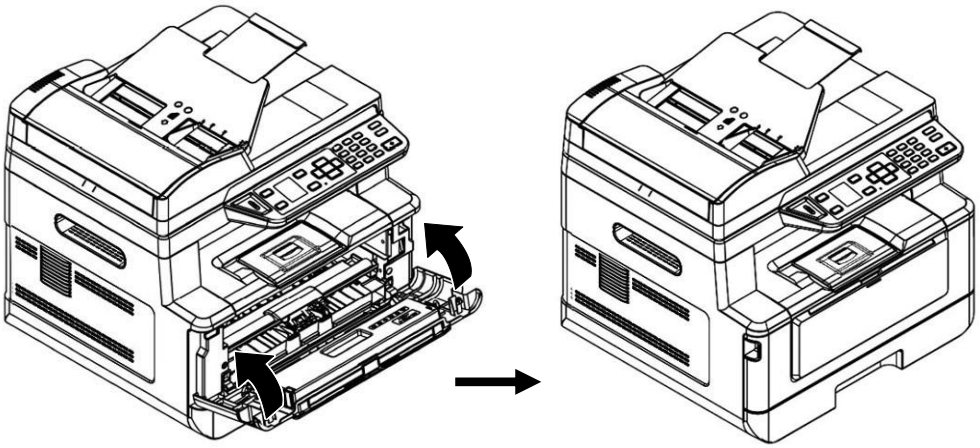

Install the Paper Stopper

Lift the paper stopper up to the stuck position.

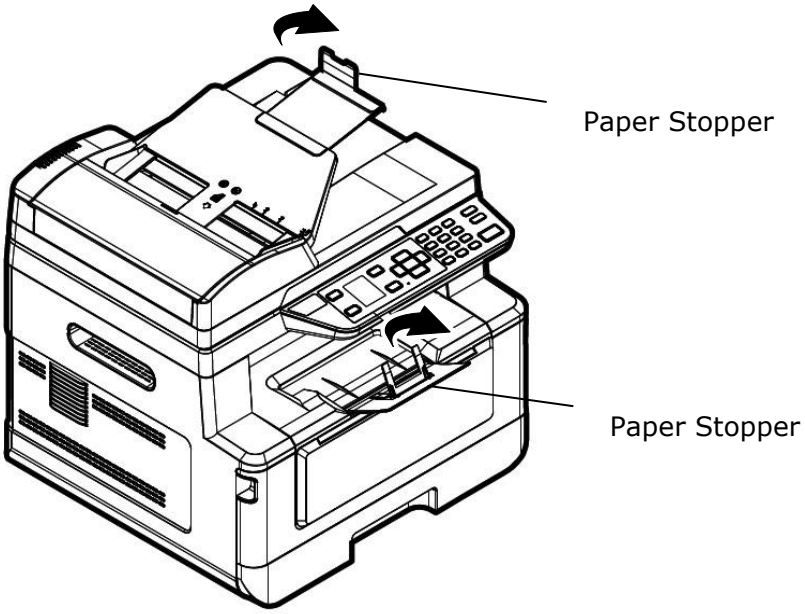

Loading The Main Input Tray

To insert paper to the main input tray,

1. Fan your paper first to ensure that the pages do not stick together.

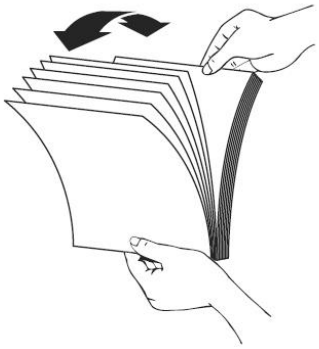

2. Align the edges of the documents by tapping the bottom of the stack against the table top. Rotate the stack 90 degrees and repeat.

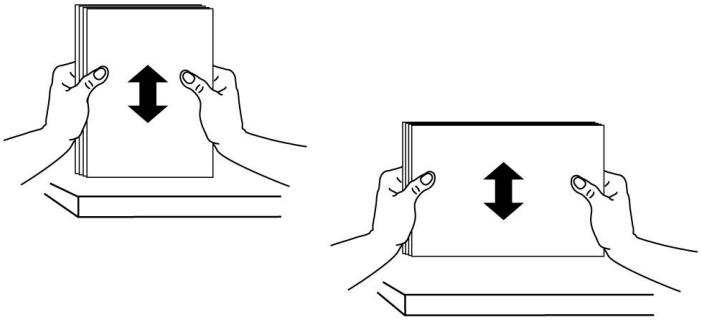

3. Pull the main tray out gently.

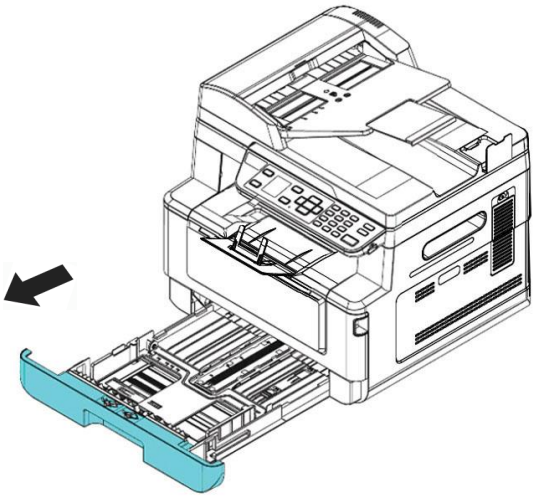

4. Press the width guide tab (①), and then move the width guide (②) to the correct position for the paper size being loaded.

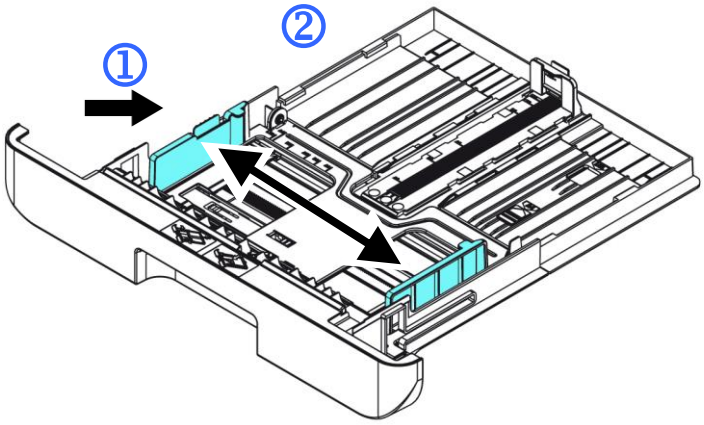

5. Unlock the length guide, squeeze the length guide tab inward (③) as shown, and slide the guide (④) to the correct position for the paper size being loaded.

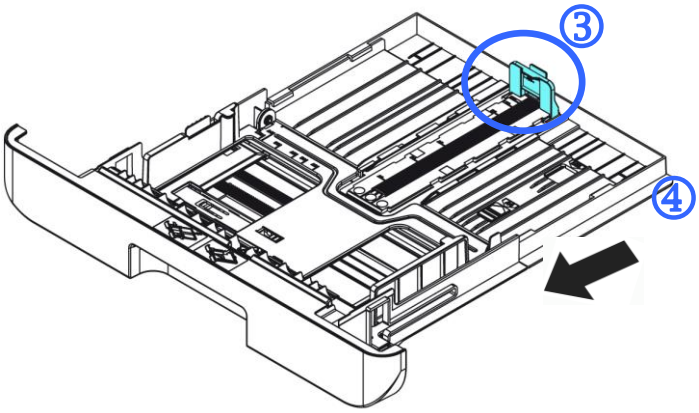

6. If you wish to load paper larger than A4, press the first length slider (⑤) and then move it to the right (⑥) to the desired length you wish.

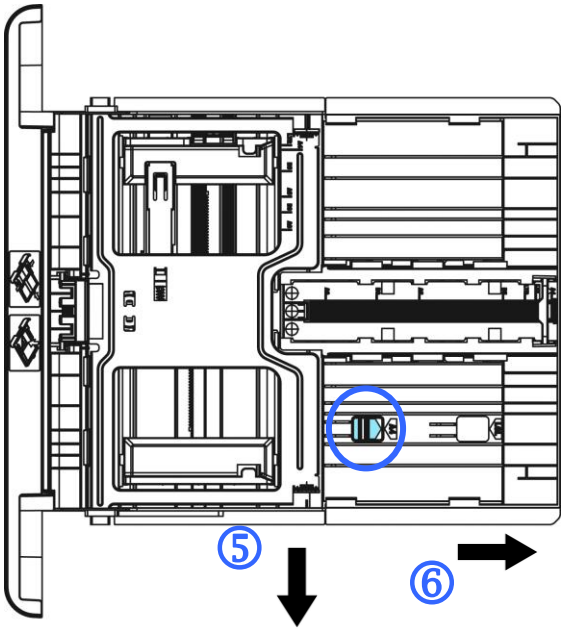

To set the length slider back to A4, press the 2nd length slider (⑦) and then move it to the left (⑧).

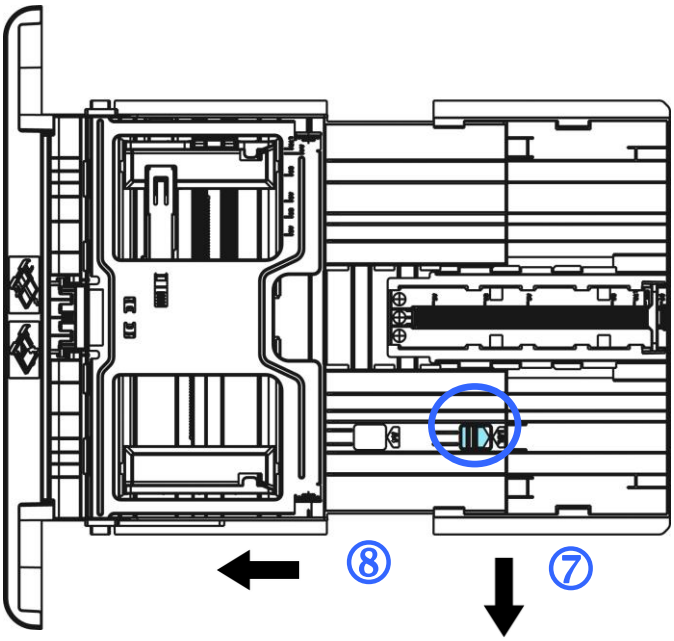

7. Load the paper stack with the **Printing Side FACE DOWN** as illustrated.

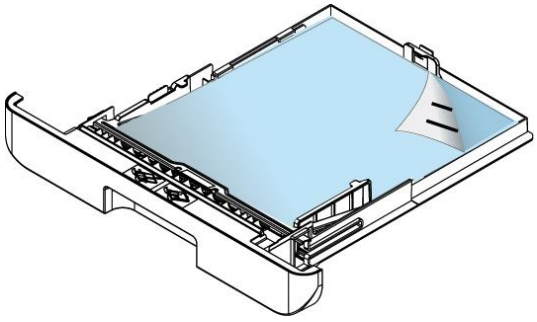

8. Insert the tray.

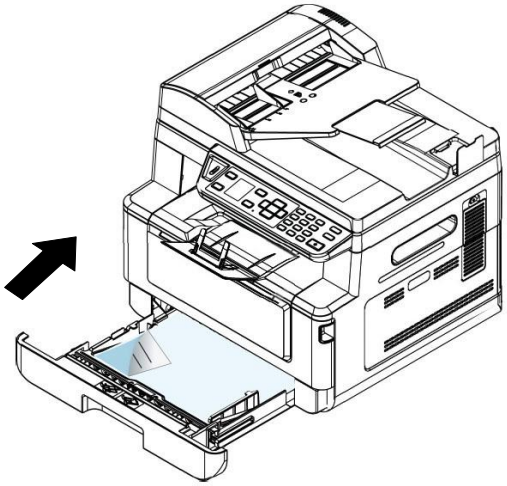

Note:

To avoid the chance of miss-fed, make sure the length guide tab and length slider are installed in their proper positions.

- Make sure the end of your paper slightly touch the length guide as indicated in below.

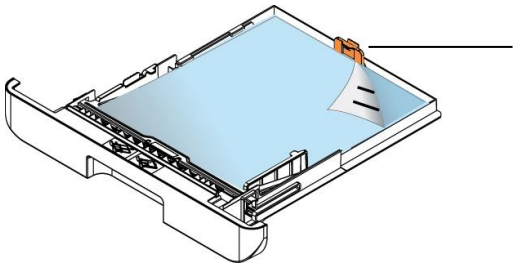

- Make sure the length slider is installed in the specified location in either position A or B as shown in below.

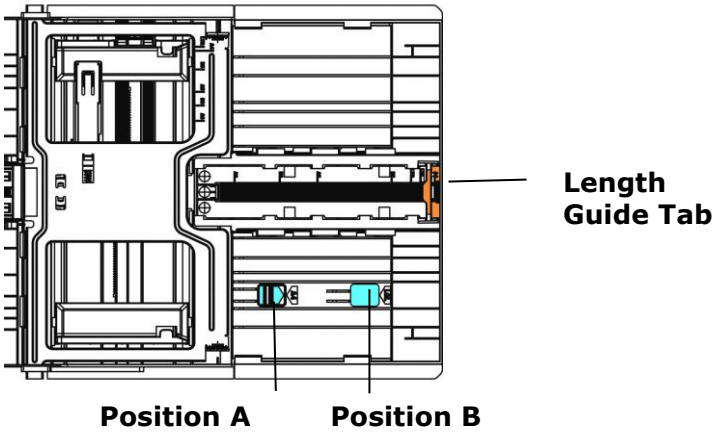

Paper sizes and weights used for Main Input Tray

Paper capacity	250 pages（70g/m² plain paper）
Paper size	A4 (210 x 297 mm) A5 (149 x 210 mm) A6 (105 x 149 mm) B5 (JIS) (182 x 257 mm) B6 (JIS) (125 x 176 mm) Letter (216 x 279 mm) Legal (216 x 356 mm) 76 x 152 mm
Paper weight	60 ~ 120 g/m²

* Duplex printing is available only for paper in A4, B5(JIS), or letter size.



Note:

- To ensure the best quality printing and copying, please use the paper or media which we have recommended.
- Make sure to fan your paper before loading it to the paper tray.
- If there are instructions about the printing side on the package of your paper, please follow the instructions to load your paper properly with the correct printing side to the paper tray.
- If the printing quality is not satisfactory or paper jams are easily to occur, turn over the paper stack so that the top page is now on bottom and then reload it to the paper tray.
- Pack and seal the remaining paper with the original packaging and store the paper in a dark and dry location away from the sunshine. Paper which collects much moisture is easy to cause jam during printing.

Loading the Manual Tray

When you need to print different size paper, you can use the manual tray.

1. Open the manual tray by grasping the handle and pull it down.

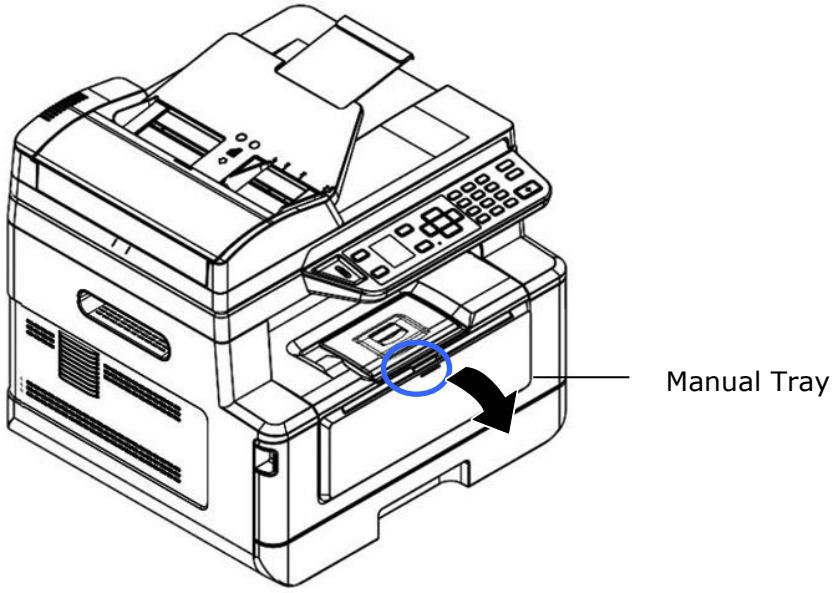

2. Pull out the manual tray extension to meet your paper size.

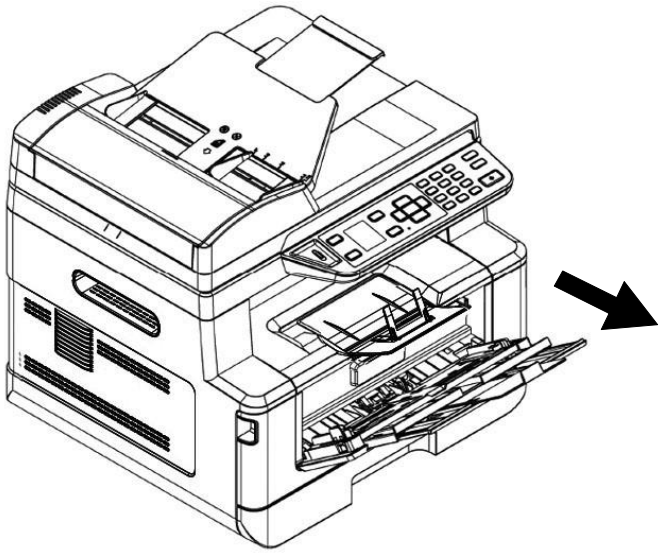

3. Fan your paper first to ensure that the pages do not stick together.



4. Align the edges of the documents by tapping the bottom of the stack against the table top. Rotate the stack 90 degrees and repeat.

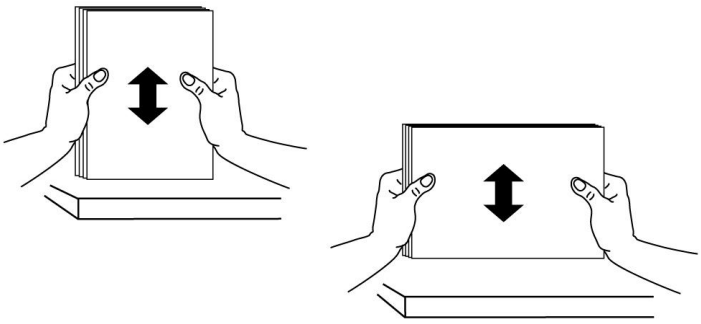

5. Load the paper stack with the **Printing Side FACE UP** as illustrated.

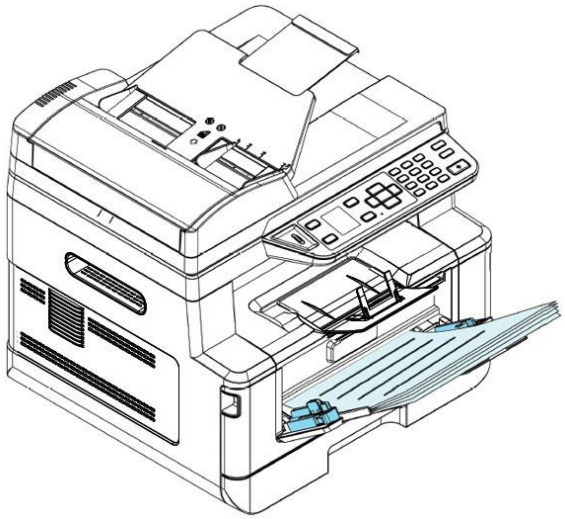

6. Slide the paper guides so that they slightly touch the paper stack.

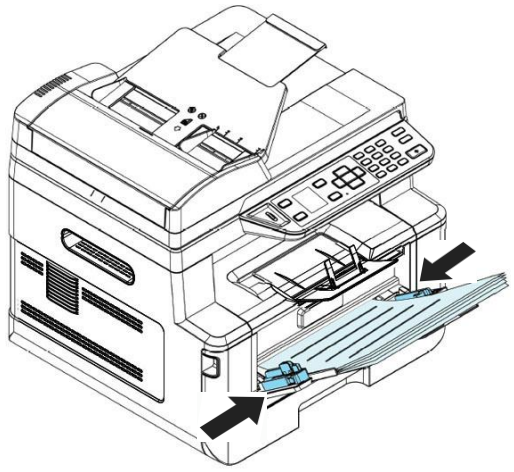

Paper sizes and weights used for Manual Tray

Paper capacity	10 pages（70g/m² plain paper）
Paper size	A4 (210 x 297 mm) A5 (149 x 210 mm) A6 (105 x 149 mm) B5 (JIS) (182 x 257 mm) B6 (JIS) (125 x 176 mm) Letter (216 x 279 mm) Legal (216 x 356 mm) Custom Size: 76 x 127 mm ~ 216 x 356 mm
Paper weight	60 ~ 163 g/m² (10 pages) 60 ~ 200 g/m² (1 page)

* Duplex printing is available only for paper in A4, B5 (JIS), or letter size.

Note:

- To ensure the best quality printing and copying, please use the paper or media which we have recommended.
- Make sure to fan your paper before loading it to the paper tray.
- If there are instructions about the printing side on the package of your paper, please follow the instructions to load your paper properly with the correct printing side to the paper tray.
- If the printing quality is not satisfactory or paper jams are easily to occur, turn over the paper stack so that the top page is now on bottom and then reload it to the paper tray.
- Pack and seal the remaining paper with the original packaging and store the paper in a dark and dry location away from the sunshine. Paper which collects much moisture is easy to cause jam during printing.

Connecting to Power

1. Connect the small end of the power cable to the power jack of your product.
2. Connect the other end to an appropriate power outlet.

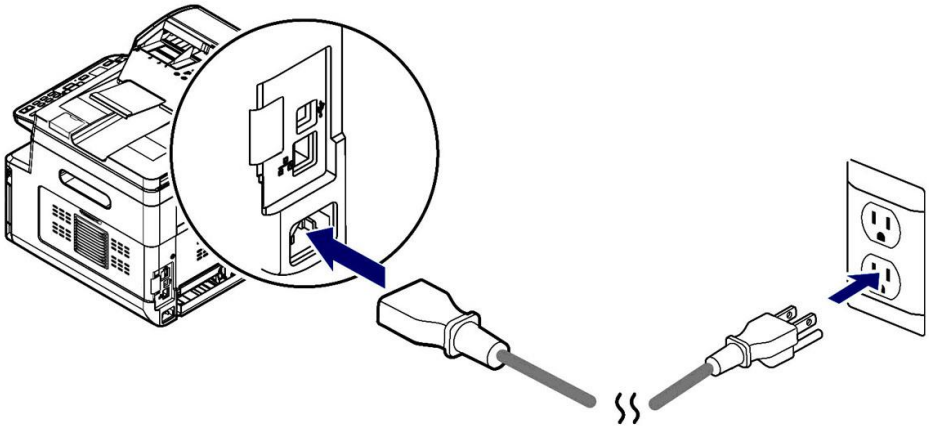

Turning On The Machine

To turn on the product, press the Power button  on the control panel, the LED light will turn solidly on. To turn off the product, hold and press the Power button for three seconds, the LED light will be off.

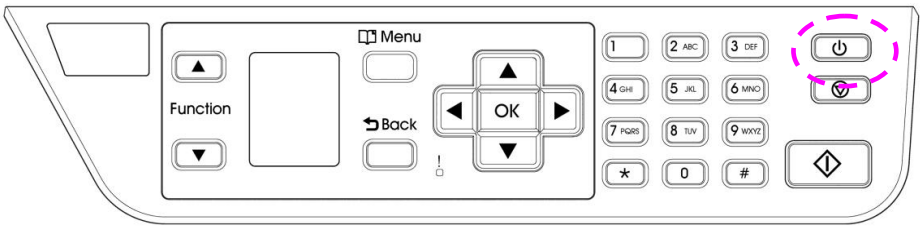

Note:
When the product is not in use, be sure to turn off the product to get a zero power consumption state.

Connecting to a Wired Network

1. Connect one end of your network cable to an available port of your Ethernet Hub.



2. Connect the other end to the LAN port at the back of the product as shown.

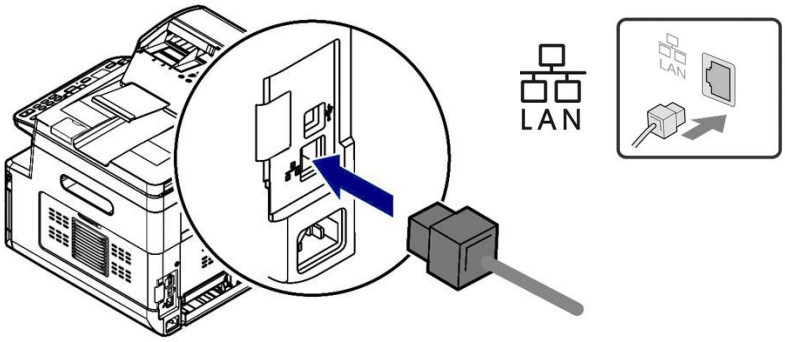

After the network cable has been successfully connected to the product, the IP address from DHCP server will be displayed in the LCD screen.

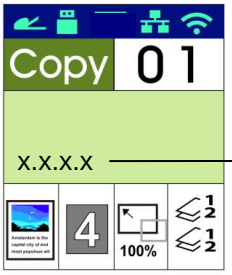

IP Address

Setting the Product's Date and Time

When using this product for the first time, the LCD screen will display the setting of [Date and Time] after turning on the product. Please follow the steps below to complete the setting of the date and time of this product. Otherwise the product cannot be operated.

1. Enter the current date. For example: input the current date as [2015-01-01] (year-month-day), use the left and right keys to move the cursor to the position you need to enter, and then press the Up and Down keys to increase or decrease the number, and finally press "OK" to save the setting.

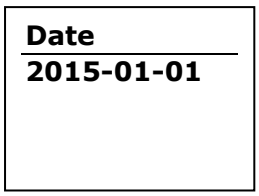

2. If the format is correct, the screen will display [**Setting OK**].

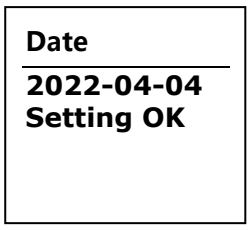

3. Press the Down key to scroll down to the time setting. Enter the current time as [08:25] (hour: minute). Use the left and right keys to move the cursor to the position you need to enter. Then press the Up and Down keys to increase or decrease the number. Finally press the "OK" key to save the settings.

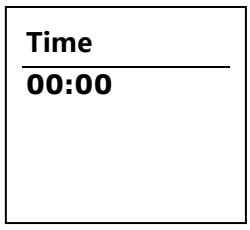

4. If the format is correct, the screen will display [**Setting OK**].

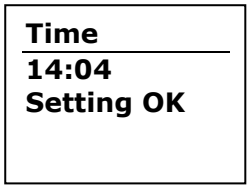

Installing the Scanner/Printer (Windows)

System Requirement

Windows 7, Windows 8, Windows 10, Windows 11

For USB Interface Users

Please follow these steps to install the scanner, and printer drivers if this machine is connected to your computer via a USB cable.

Important!

DO NOT connect the USB cable before installing the scanner, and printer drivers.

1. Insert the supplied CD into your CD-ROM drive. The installation menu will be displayed.

2. To install the **scanner /printer** drivers:

   Click 「**Install Scanner Driver and Printer Driver** 」and follow the on-screen instructions to complete the installation of the program.

3. When the [**Setup Type**] dialog box appears, select [**USB printer**] and then click [**Next**].

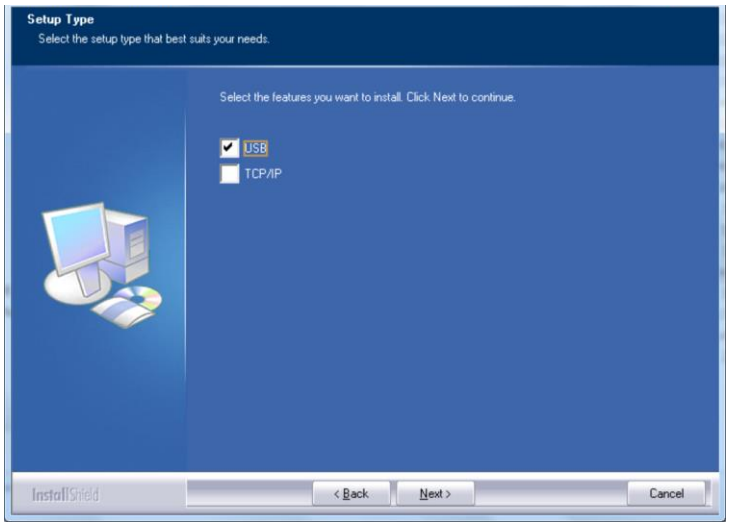

4. During installation, the [**USB Connection**] dialog box will be prompted to instruct you to turn on the MFP and then connect the MFP to your computer with a USB cable.

   a. Connect one end of the USB cable to your computer.

   b. Connect the other end to the USB port of your product.

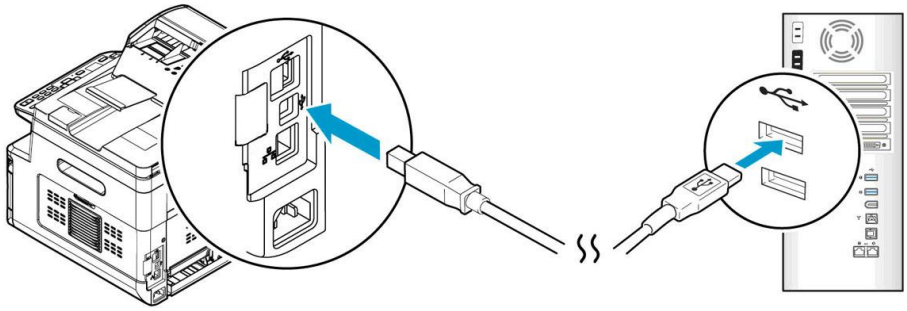

5. When 「**Found New Hardware**」 screen appears, click **Next** and follow the on-screen instruction to complete the installation.

6. When the following dialog box appears, click [**Yes**] if you wish to create a desktop shortcut for the scanning software Capture Tool.

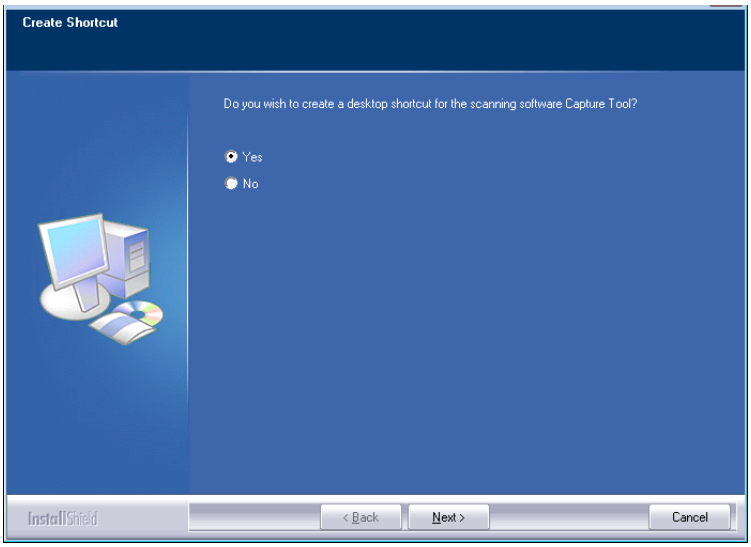

7. When the **Finish** dialog box appears, click **Finish** to complete.

   If you have successfully installed the printer's driver, you will find a printer, 「MB3300 Printer」, has been added in the 「Printers and Faxes」 option from the Control Panel.

For Network Interface Users

Please follow these steps to install the scanner, printer, and fax drivers if this machine is connected to your computer via a network.

1. Insert the supplied CD into your CD-ROM drive. The installation menu wil be displayed.

2. To install the scanner driver and printer driver:

Click 「**Install Scanner Driver and Printer Driver**」 and follow the on-screen instructions to complete the installation of the program.

3. When the **Setup Type** dialog box appears, check [**TCP/IP**] and click [**Next**] to continue. If you need to connect the product to a wireless network, check [**USB**] **and** [**TCP/IP**] since the **Network Setup Tool** is included in the USB driver and only available when the product is connecting to your computer through the USB cable.

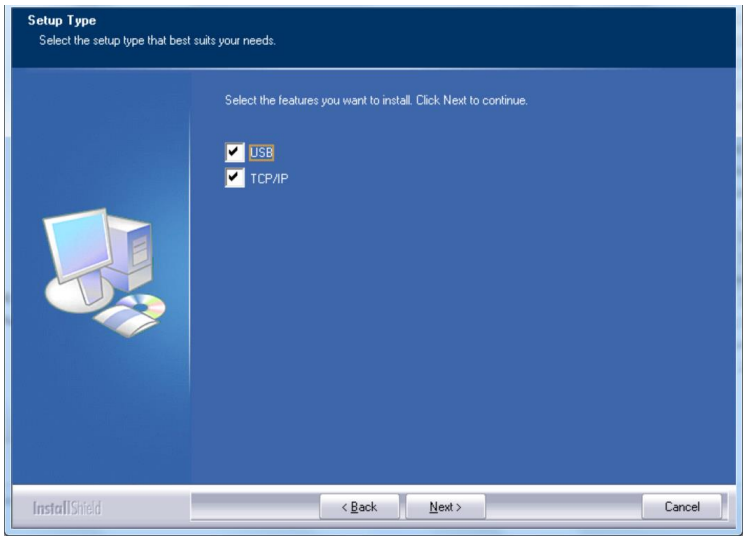

4. When the following **Set IP** dialog box appears, choose one of the following options and click [**>**] to add to the printer list. When the desired option setting is completed, click [**OK**]. (Follow the preceding section – Checking the Product's Default IP Address to obtain the product's default IP address.

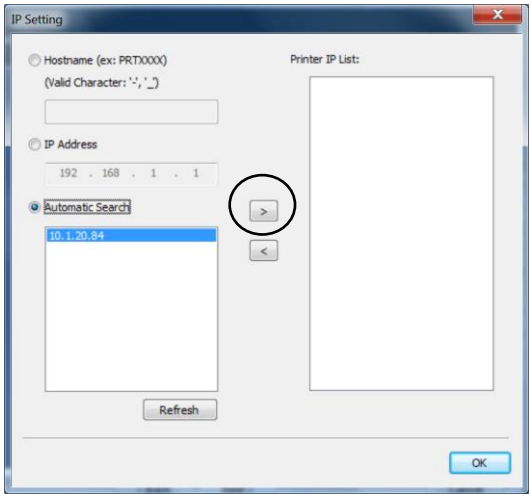

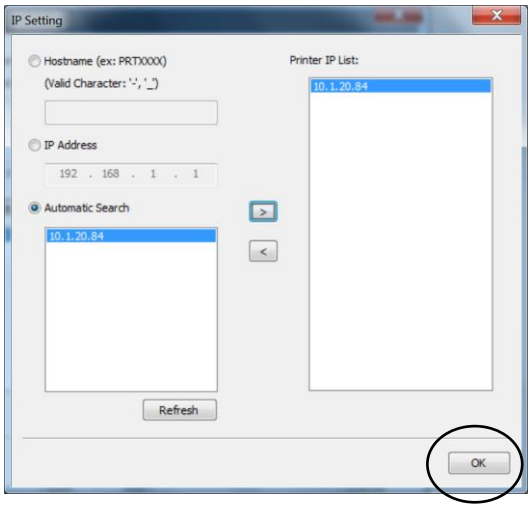

Host Name	Enter the product's host name to be connected in the blank box of the Host Name option.
IP Address	Enter the product's IP address to be connected in the blank box of the IP Address option.
Auto Search	Searches the product's printers automatically, and all the product's host names found in the network will be displayed in the box of the Automatic Search. Use your mouse to choose your desired host name to be connected.

5. When the following dialog box appears, click [**Yes**] if you wish to create a desktop shortcut for the scanning software Capture Tool.

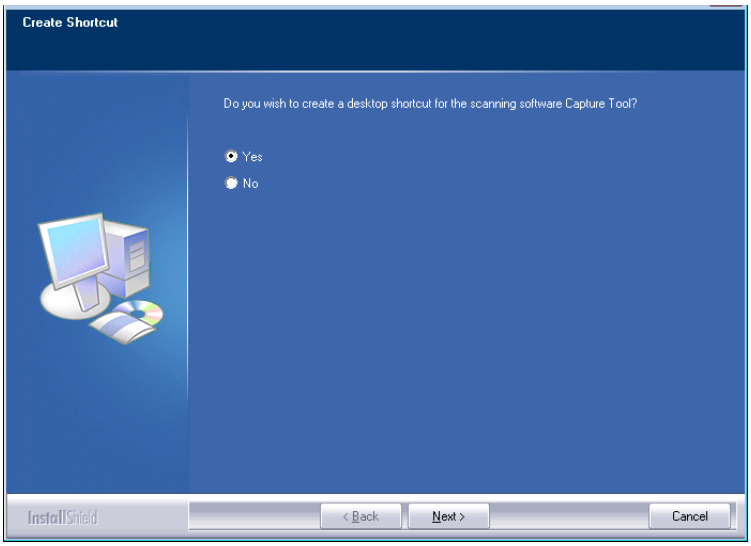

6. When the Finish dialog box appears, choose 「**Finish**」 to complete.

If you have successfully installed the printer's driver, you will find a printer, 「MB3300 NetWork」, has been added in the 「Printers and Faxes」option from the Control Panel.

Changing the Product 's IP Address in a Wired Network

To change the product's IP address, you need to install the **Network Setup Tool**. The **Network Setup Tool** is included in the USB printer driver. After the installation of the USB printer driver is completed, the **Network Setup Tool** is automatically installed onto your computer. Follow these steps to update the IP address to the product in a wired network.

1. Make sure the product is connected to your computer via a USB cable.
2. Start **Network Setup Tool** by choosing the **Start** button and then select **All Programs>MB3300 MFP>Network Setup Tool** in succession. The following Network Setup Tool screen will be prompted.

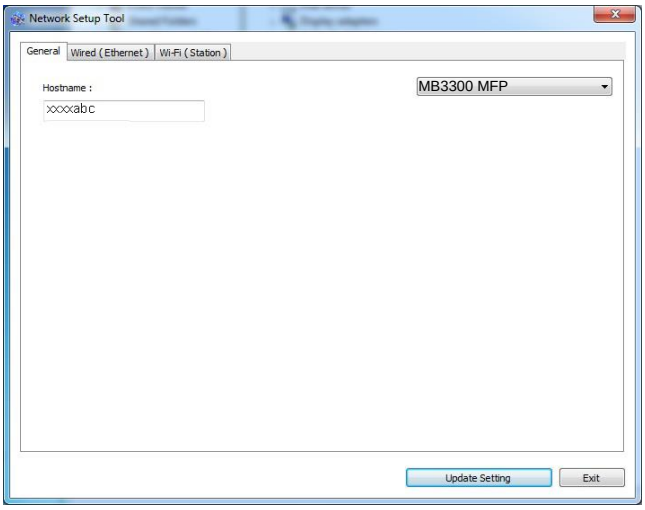

3. On the [**General**] page, check [**Wired (Ethernet)**] Network.
4. Click the [**Wired (Ethernet)**] tab to prompt the Wired (Ethernet) page.

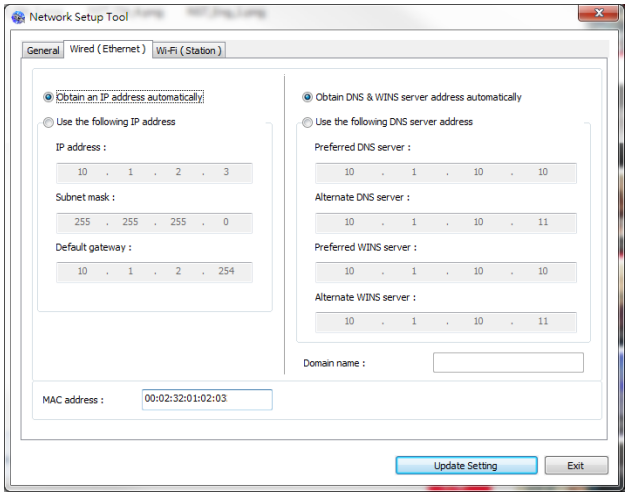

5. Check [**Obtain an IP address automatically**] to obtain the IP address directly from the DHCP server or you may enter your static IP on the [**IP Address**], [**Subnet Mask**], and [**Gateway**] field respectively.
6. If you have assigned a specific IP, enter your domain name server and WINS server

as well and then click [**Update Setting**] to update the IP information to the product.

7. If update is successfully, an [**Update Device Successfully**] message will be displayed and the Network Setup Tool will be automatically closed.

Setting the Product's IP Address in a Wireless Network

To set an IP address to the product, you need to install the **Network Setup Tool**. The **Network Setup Tool** is included in the USB printer driver. After the installation of the USB printer driver is completed, the **Network Setup Tool** is automatically installed onto your computer. Follow these steps to set and update the IP address to the product in a wireless network:

You may also choose your network connection type via the web page. (See more details in the subsequent section Customize System's Settings via the Embedded Web Page in Chapter 5.)

1. Make sure the product is connected to your computer via a USB cable.
2. Start the **Network Setup Tool** by choosing the **Start** button and then select **All Programs>MB3300 MFP>Network Setup Tool** in succession. The following Network Setup Tool screen will be prompted.

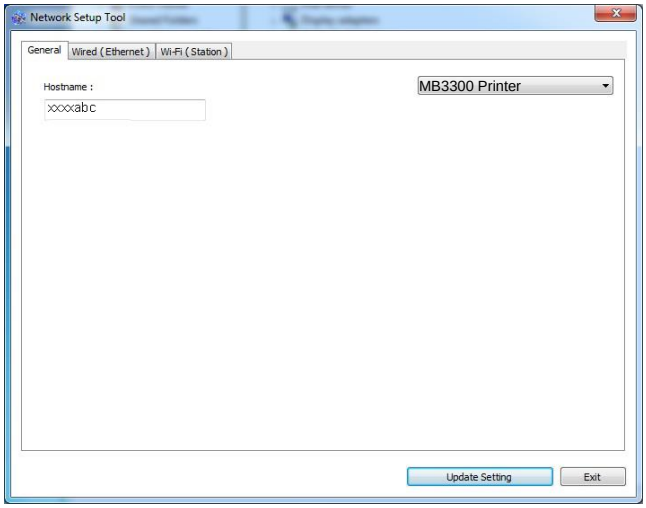

3. On the [**General**] page, check [**Wi-Fi (Station)**].
4. Click the [**Wi-Fi (Station)**] tab to prompt the [**Wi-Fi (Station)**] page.

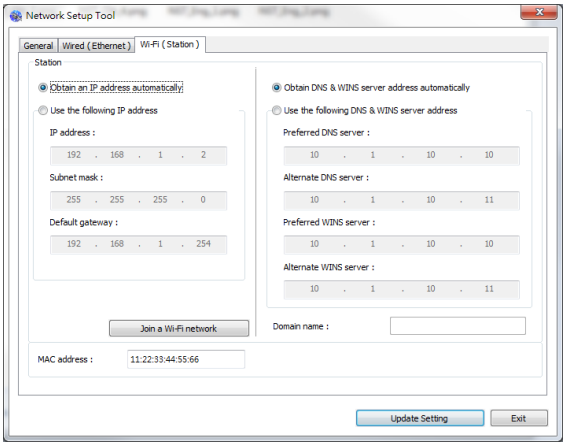

5. Check [**Obtain an IP address automatically**] to obtain the IP address directly from the DHCP server or you may enter your static IP on the [**IP Address**], [**Subnet Mask**], and [**Gateway**] field respectively.

6. Click [**Join a Wi-Fi network**] and the currently connected wireless networks will be displayed. Select the wireless network you want to connect and then enter the security key if required.

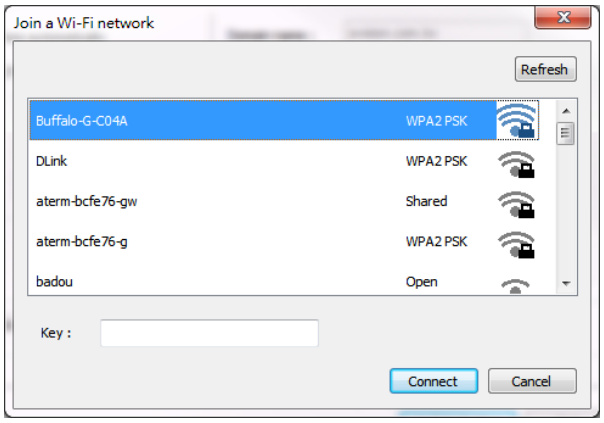

7. Click [**Connect**] to start connecting the SSID (wireless network name) and then update the IP information to the product.

8. If update is successfully, an [**Update Device Successfully**] message will be displayed and the Network Setup Tool will be automatically closed.

Uninstalling the Scanner Driver and Printer Driver

1. From the 「**Start**」menu, select 「**All Programs**」, 「**the MB3300 MFP**」, and then 「**Uninstall Driver**」.

Or from the 「**Start**」menu, select 「**Control Panel**」, 「**Add or Remove Programs**」, 「**the MB3300 MFP**」, and then 「**Remove**」.

2. Follow the instructions on the screen to complete removing the scanner driver and the printer driver.

Specifying the Product's SMTP Server

To use the scan-to-email feature, you must specify the product's SMTP server.

To specify the SMTP server,

1.Refer to the preceding section, **Specifying the Product's Date and Time**, to launch the product's embedded web page.

2.On the product's web page, choose [**Properties**] and then choose [**Network**] on the left side as shown in the following:

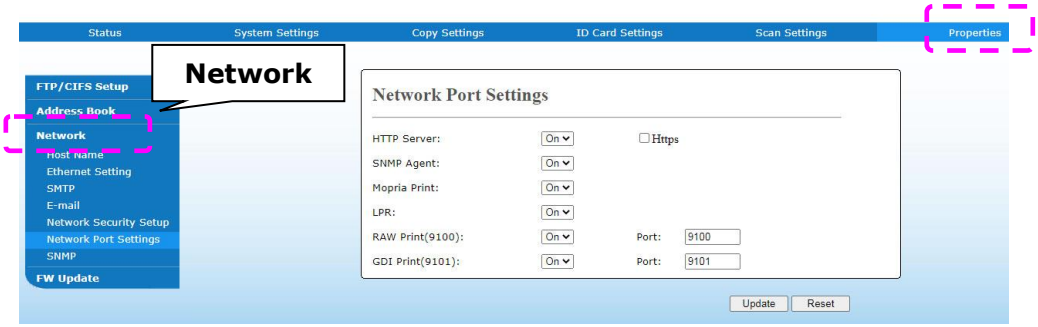

3. Choose [**SMTP**] from the Network option. The following SMTP page will be displayed. Enter your IP address for the SMTP server and the authentication information if required.

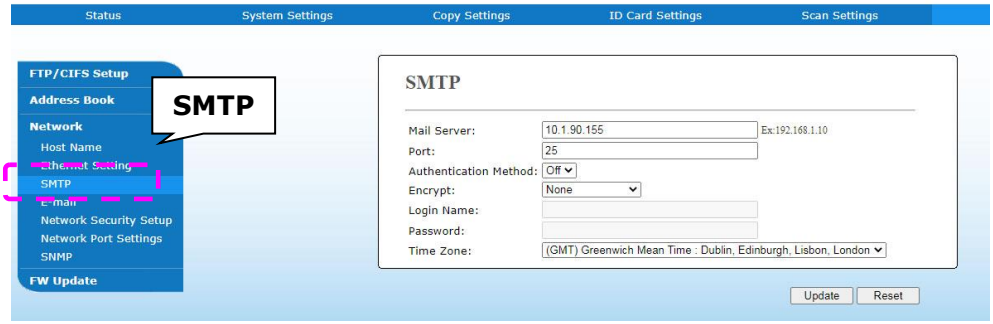

E-mail Server Setting	
Mail Server	Enter the IP address of your SMTP server.
SMTP Port #	Enter the port number of the SMTP server. ***** 25
Authentication Method	Enter the email authentication method. **Choice: *None, SMTP, POP3**
Login Name	Enter the login name for SMTP authentication.
Password	Enter the password for SMTP authentication.
Time Zone	Enter the time zone of your location.



Note:
Please check the SMTP server information with your Network Administrator.

4.Click [**Update**] to save the setting and exit the page.



Note:
1. The login name is case-sensitive and is up to 32 digits or characters.
2. The password is case-sensitive and is up to 16 characters.

Creating a File Destination on the Network

The product allows you to scan and save the scanned image to a specified destination including FTP and CIFS server on the network, or a USB flash drive.

Before sending the image files to FTP or CIFS server on the network, you need to first setup the FTP or CIFS destination through the embedded web page. Please follow these steps to create a FTP or CIFS destination.

To set FTP or CIFS as your filing destination,

1. Refer to the preceding section, **Specifying the Product's Date and Time**, to launch the product's embedded web page.

2. On the product's web page, choose [**Properties**] and then choose [**FTP/CIFS Setup**] on the left side. The following [**File Destination**] page will be displayed.

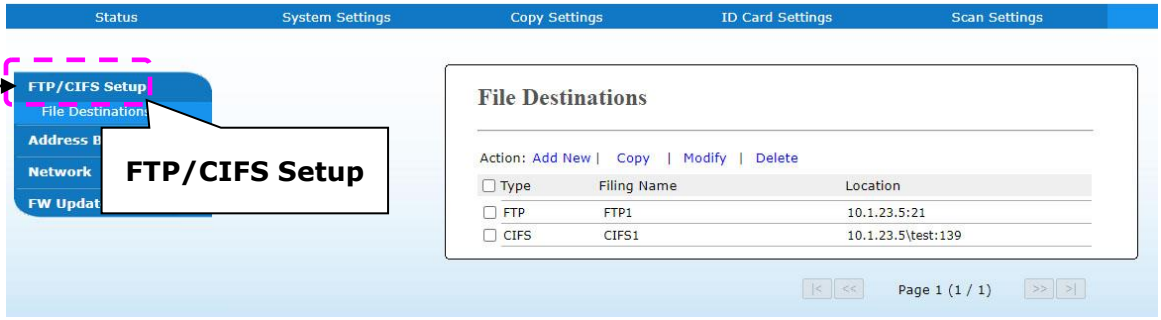

3. Choose [**Add New**] to prompt the [**New Filing Settings**] page.

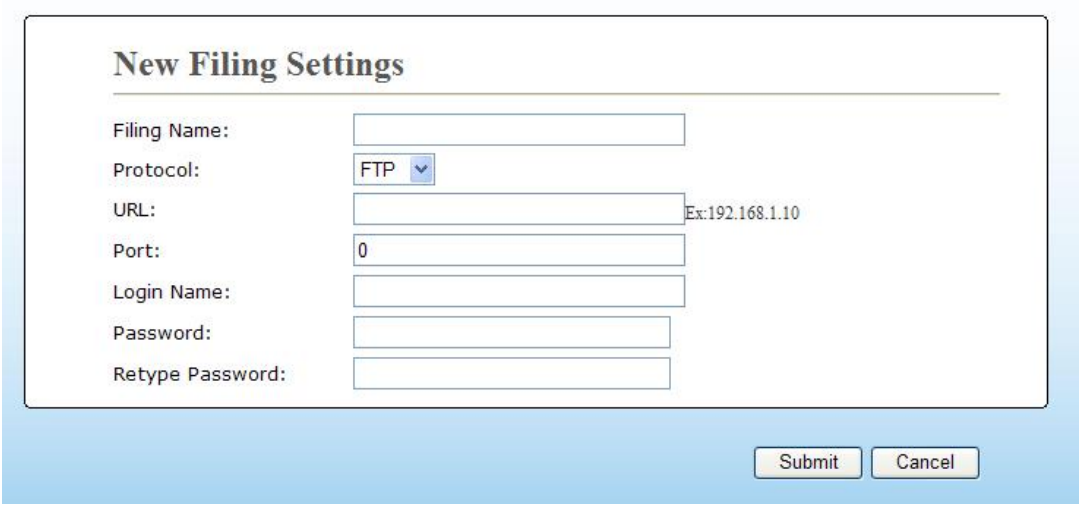

4. Refer to the following table to enter proper settings.

Item	Description
Filing Name (Name of Destination)	Enter the name of the destination. (The name will be displayed in the destination list.)
Protocol	Choose type of protocol. Choice: CIFS, FTP, FTPS
URL (Address)	Enter the domain name or IP address for the server. For example, domainname.com\foldername or 10.1.23.145\foldername.
Port Number	Enter the port number of the server here if your port number is different with the default setting. Default: **FTP :21, CIFS:139, FTPS: 990**
Login Name	Enter the authorized login name to the server.
Password	Enter your password to the server.
Retype Password	Reenter your password.

5. After completing entering the settings, click「**Submit**」to finish. The new filing destination will be displayed in the destination list. This means you have successfully created a new CIFS or FTP filing destination.

Creating Your Address Book

The product allows you to scan and save the scanned image to your recipients via e-mail. Yet before sending the image files to e-mail, you need to first setup address book through the embedded web page. Please follow these steps to create your address book.

To create your address book,

1. Refer to the preceding section, **Specifying the Product's Date and Time**, to launch the product's embedded web page.

2. On the product's web page, choose [**Properties**] and then choose [**Address Book**] on the left side. The following page will be displayed.

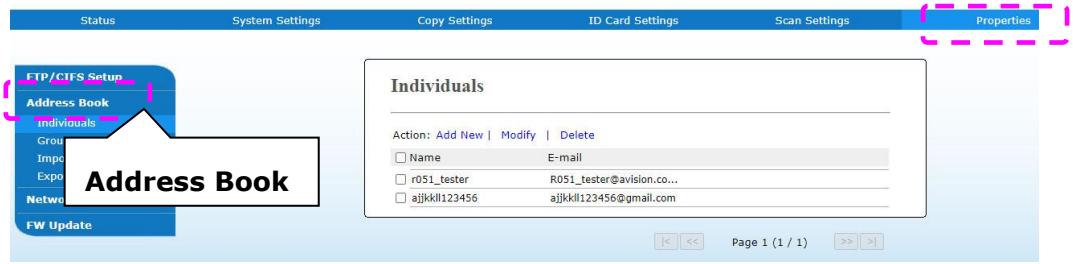

3. Choose [**Add New**] to prompt the following page.



4. Enter the name, and e-mail address for an individual recipient.

5. After completing entering the settings, click「**Submit**」to finish. The new recipient will be displayed in the e-mail list. This means you have successfully created an address book.

3.Operation

Loading Paper

The product can scan and send document(s) either in the ADF (Automatic Document Feeder) or on the glass. If you need to send multiple pages, please load your papers in the ADF. The ADF can hold up to 50 pages (70 g/m^2, 20 lbs) at one time. If you need to send pages from books, newspaper clippings, or paper with wrinkles or curls, please place your paper on the glass.

Notice on Using the ADF

Before using the ADF, please make sure that your paper meets the following specifications:

- Document(s) can range in size from 76.2 x 127 mm (3 x 5 in.) to 216 x 356 mm (8.5 x 14 in.).
- Document(s) should be square or rectangular and in good condition (not fragile or worn).
- Document(s) should be free of curl, wrinkle, tears, wet ink, or punch holes.
- Document(s) should be free of staples, paper clips, paper sticky notes.
- Keep the glass clean without document placed on it.



Note:
To transmit irregular types of document(s), place the document(s) on the glass or make a copy first and then transmit the copy instead.

Loading Your Document in the ADF Paper Tray

Fanning Your Document

Note:
To avoid occasional multi-feeds or paper jams, please fan your documents and align the top edges before feeding them into the scanner.

---

1. Hold both ends of the documents and fan them a few times.

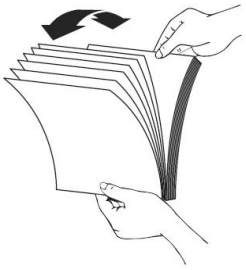

2. Rotate the documents by 90 degrees and fan them in the same manner.
3. Align the edges of the documents in a step-like pattern (see picture below).

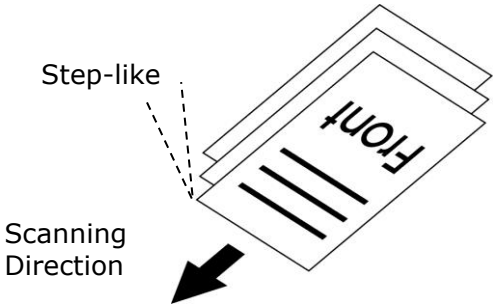

Placing Document(s) in the ADF

1. Make sure your document is free of staples, paper clips and is not torn out.

2. If you have multiple pages, fan your document(s) to avoid occasional paper jam.



3. Place your document(s) with the text **FACE UP** in the ADF and make sure that the top of each page feeds in first.

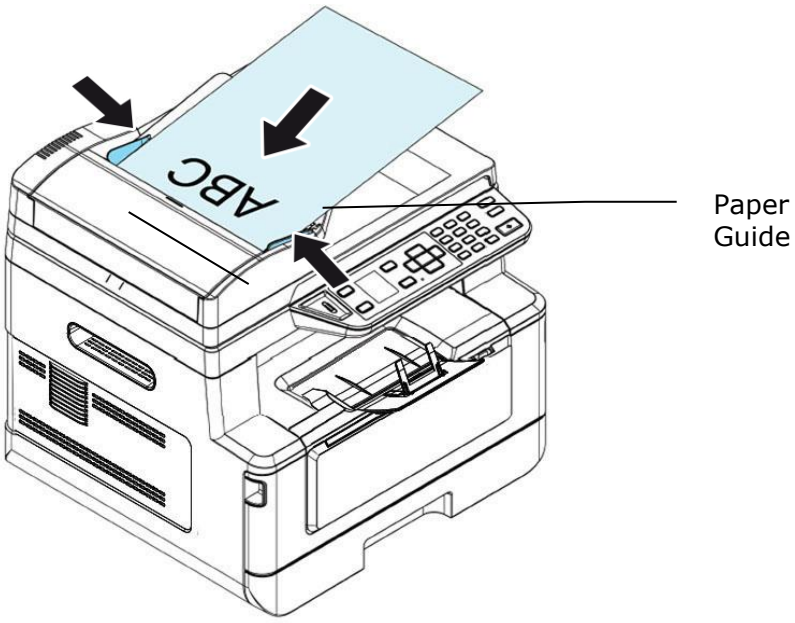

4. Adjust the Paper Guides to center the document(s) in the ADF.

Note:
If there is no paper in the ADF input tray, the product considers the scan source is flatbed glass. If there is paper in the ADF input tray, the product considers the scan source is ADF input tray.

Placing Document(s) on the Glass

1. Open the document(s) cover to reveal the glass.

2. Place your document with the text **FACE DOWN** on the glass and align the document in the upper-left corner.

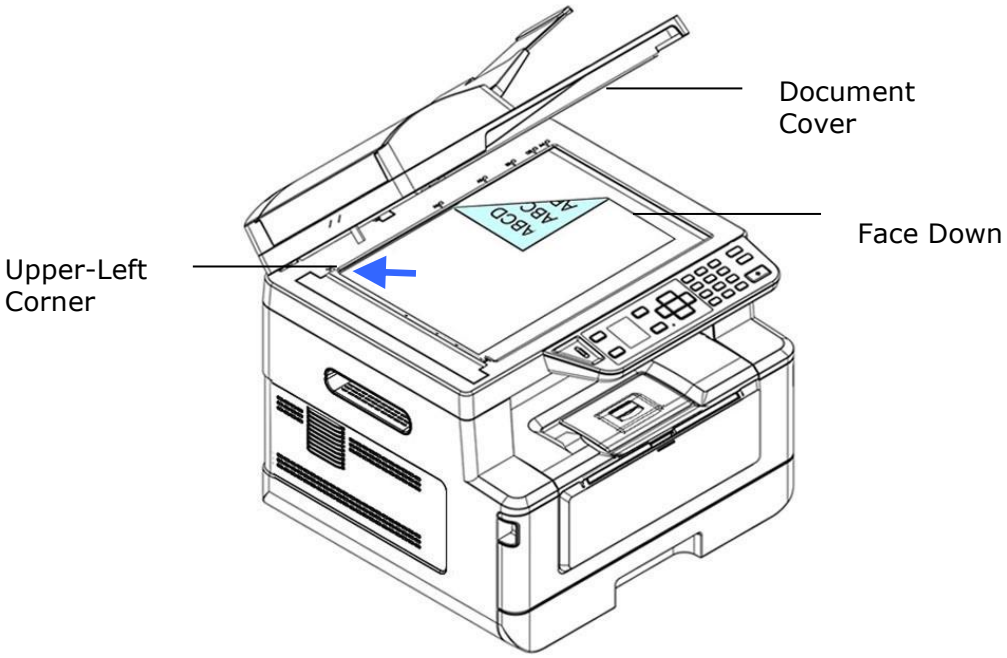

3. Close the document cover.

Paper Orientation

Place your A4 or LTR paper vertically on the glass with the text facing down and align it with the A4 or LTR marks.

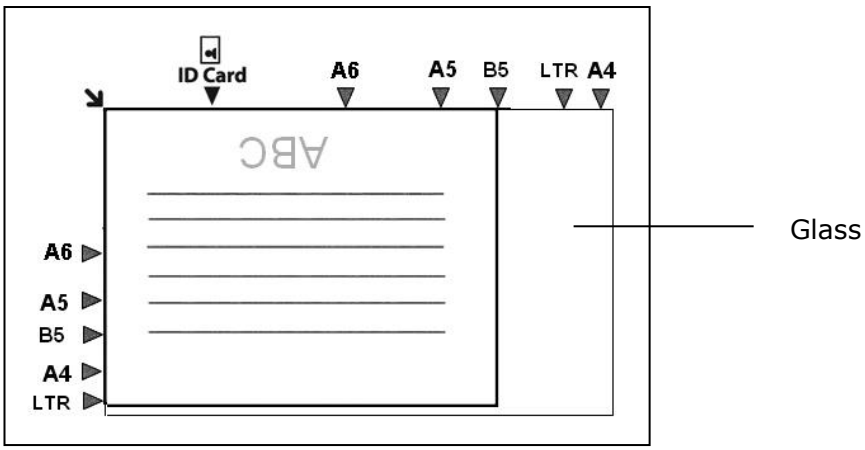

Copy

1. Place your multi-page document **Face Up, Top First** in the auto document feeder or place your single-page document **Face Down** on the document glass.

2. Press the **Function ▲/▼** key until the following 「**Copy**」 mode is shown in the LCD display. (Copy mode is the default operational mode.)



3. Confirm or change Copy options as desired such as Original, Density, Paper Supply, and Sort.

Press ▶ or ◀ to select the setting.

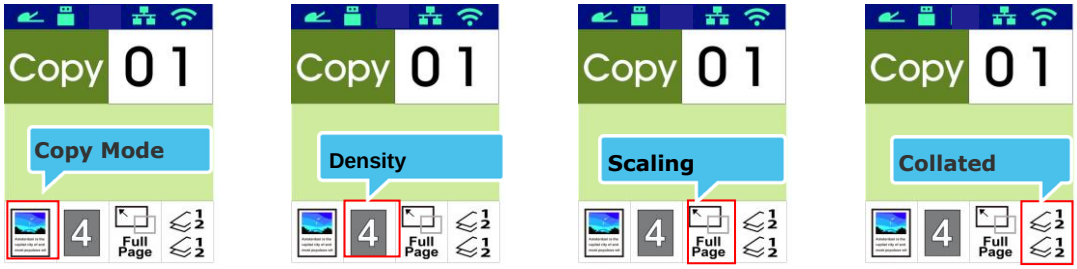

Press ▲ or ▼ to select the option.

Copy Mode 	Choose your original type. Choice:  ***(Text)*** /  (Bill) /  (Mixed)
Density	Lighten or darken your image. Choice: 1~7 (default: ***2***) 
Scaling  100%	Resize your document. Choice:  100% ***(100%)*** ,  Full Page,  Custom Zoom (25%~400%),  N-up **100%**: Resize your document according to your original. **Full Page**:Resize your document to fit your output paper size. **Custom Zoom**: Resize your document between 25% and 400% in one percent increment. **N-up**: Combine 2 or 4 pages of documents to be printed on a single side of a sheet.

Collated 		Collated: Place your copies in 「Sort」order (e.g. page 1,2,3 /1,2,3 /1,2,3).
		***Uncollated:*** Place your copies in 「Stack」order (e.g. 1,1,1/2,2,2/3,3,3).

*** The default settings is displayed in italic bold style.**

4. Enter your copy count with the numeric keypad. The copy count will be displayed.

5. Press the [**Start**] button () on the control panel to start copying your documents.

Duplex Copy

1. Place your multi-page document **Face Up, Top First** in the auto document feeder or place your single-page document **Face Down** on the document glass.

2. Press the **Function** ▲/▼ key until the following 「**Copy**」 mode is shown in the LCD display. (Copy mode is the default operational mode.)



3. Confirm or change Copy options as desired such as Original, Density, Paper Supply, and Sort.

   Press ▶ or ◀ to select the setting.

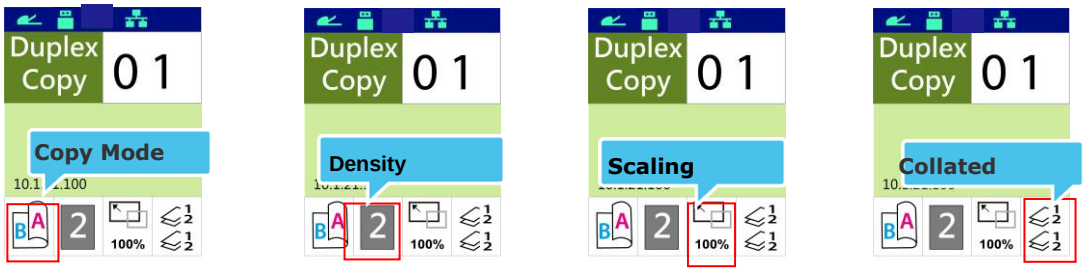

   Press ▲ or ▼ to select the option.

Rotate Rear Side 	Choose if you want to rotate the rear page. Choice: On/***Off***  : Off  : On
Density	Lighten or darken your image. Choice: 1~7 (default: ***2***) 

<table>
<tr><td>Scaling

100%</td><td>Resize your document.
Choice:  100% (100%) ,  Full Page,  Custom Zoom (25%~400%),  N-up
100%: Resize your document according to your original.
Full Page:Resize your document to fit your output paper size.
Custom Zoom: Resize your document between 25% and 400% in one percent increment.
N-up: Combine 2 or 4 pages of documents to be printed on a single side of a sheet.</td></tr>
<tr><td>Collated
</td><td><table>
<tr><td></td><td>Collated: Place your copies in 「Sort」order (e.g. page 1,2,3 /1,2,3 /1,2,3).</td></tr>
<tr><td></td><td>Uncollated: Place your copies in 「Stack」order (e.g. 1,1,1/2,2,2/3,3,3).</td></tr>
</table></td></tr>
</table>

*** The default settings is displayed in italic bold style.**

4. Enter your copy count with the numeric keypad. The copy count will be displayed.

5. Press the [**Start**] button () on the control panel to start copying your documents.

ID Card Copy

The ID Card Copy function allows you to copy both the front and rear side of your ID card easily and correctly in a second.

The Operation Steps:

1. Place one side of your ID card **FACE DOWN**, align it to the 「**ID Card**」mark as indicated below:

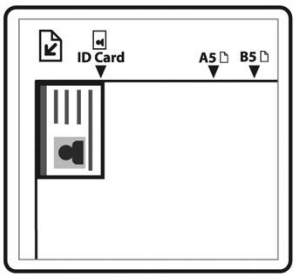

2. Press **Function** ▲/▼ button until the 「**ID Card Copy**」is displayed on the screen.



3. Confirm or change options as desired such as Mode, Density, Paper Supply, or Paper Size.

   Press ▶ or ◀ to select the setting.

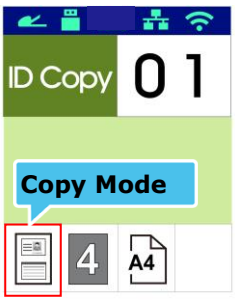

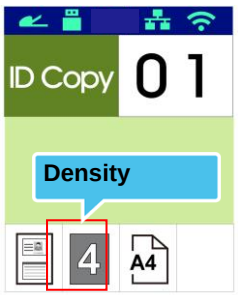

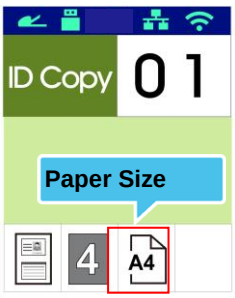

   Press ▲ or ▼ to select the option.

Mode 	**Choice: *Left/Right*, Up/Down, Front/Rear**
	 **Left/Right** – Copy the left and right side of your ID card on one side of a sheet.
	 **Up/Down** – Copy the front and rear side of your ID card on the upper and bottom half of one side of a sheet.
	 **Front/Rear** – Copy the front and rear side of your ID card on the front and rear side of a sheet.

Density	Lighten or darken your image. Choice: 1~7 (default: **2**)
Paper Size 	Select your paper size. Choice: A4, Letter, LGL, A5 (not available for Front/Rear).
*** Default settings in italic bold style.**	

4. Enter your copy count. The copy count will be displayed.

5. Press the [**Start**] button () on the control panel to start copying your cards.

6. After the first side scanning is finished, the「**Next:Press 1/ Finish:Press 2** 」dialog box will be prompted.

7. Open the document cover and place the other side of your card, align to the「**ID Card**」mark as illustrated.

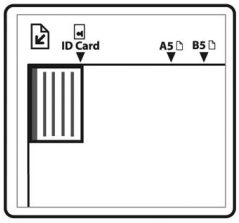

8. As illustrated by choosing 「**ID Card Copy (Up/Down)** 」, tap「**1**」on the operational panel to continue scanning the other side of your card or tap [**2**] to leave the screen. The result is illustrated in below:



Important!
The ID Card copy feature does not support loading your cards from the auto document feeder.

Scan to E-mail

The scan function allows you to first scan your documents and then send the scanned image to a specified e-mail address. To send your scanned images to an e-mail address, you need to first set the e-mail settings including the address book through the product's embedded web page.

The operating steps:

1. Place your multi-page document **Face Up, Top First** in the auto document feeder or place your single-page document **Face Down** on the document glass.

2. Press **Function** ▲/▼key until the following「**Email**」mode is shown in the LCD display.

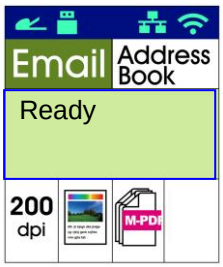

3. Press ▶ to highlight the Address Book 

and then press [**OK**].

4. Select your recipient from the Address Book and then press [**OK**]. (See Chapter 4 for more details on how to create your address book)

5. Confirm or change options as desired such as Density, Resolution, Color Mode, or File Format.

   Press ▶ or ◀ to select the setting.

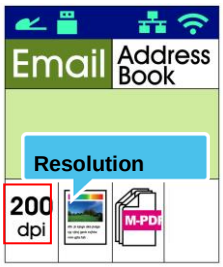

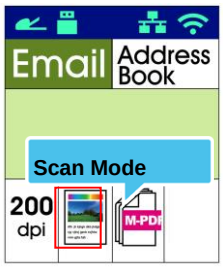

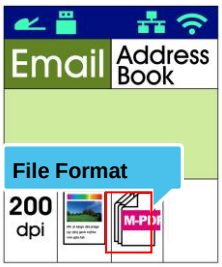

   Press ▲ or ▼ to select the option.

Resolution	Choose the resolution of the scanned image. The higher the value, the more details can be reviewed yet more disk space will be required. Choice: 150/***200***/300/600 dpi 150 dpi: Suits to be viewed on the screen. 200 dpi: Suits for most business document. 300 dpi/600 dpi: High quality image helps increase OCR (optical character recognition) accuracy.
Color Mode 	Choose your desired color mode. Choice:  ***Color*** 、 Gray 、 Black and White
File Format 	Choose your desired file format for the scanned image. Choice: ***MPDF (Multi-Page PDF)***、PDF (One-Page PDF)、JPEG、TIFF
*** Default settings in italic bold style.**	

6. Press the [**Start**] button () on the control panel to start scanning your documents.

Scan to CIFS/FTP

The scan function allows you to first scan your documents and then send the scanned image to a server in the network such as CIFS or FTP servers. To save your scanned images to the network, you need to first set the CIFS or FTP settings through the product's embedded web page.

The operating steps:

1. Place your multi-page document **Face Up, Top First** in the auto document feeder or place your single-page document **Face Down** on the document glass.

2. Press **Function ▲/▼** key until the following「**Scan to CIFS/FTP**」mode is shown in the LCD display.



3. Press ▶ to highlight the file destination and then press [**OK**].

4. Select your filing destination and then press [**OK**]. (See Chapter 4 for more details on how to create your file destinations.)

5. Confirm or change options as desired such as Density, Resolution, Paper Supply, or Paper Size.

   Press ▶ or ◀ to select the setting.



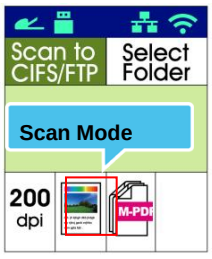

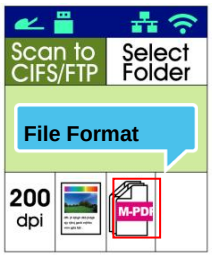

   Press ▲ or ▼ to select the option.

Resolution	Choose the resolution of the scanned image. The higher the value, the more details can be reviewed yet more disk space will be required. Choice: 150/***200***/300/600 dpi 150 dpi: Suits to be viewed on the screen. 200 dpi: Suits for most business document. 300 dpi/600 dpi: High quality image helps increase OCR (optical character recognition) accuracy.
Color Mode 	Choose your desired color mode for your scanned image. Choice:  ***Color*** 、 Gray 、 Black and White
File Format 	Choose your desired file format for the scanned image. Choice: ***MPDF (Multi-Page PDF)***、PDF (One-Page PDF)、JPG、TIFF.
*** Default settings in italic bold style.**	

6. Press the [**Start**] button () on the control panel to start scanning your documents.

Scan to USB

The scan function allows you to first scan your documents and then send the scanned image to a USB flash drive inserted to the product.

The operating steps:

1. Place your multi-page document **Face Up, Top First** in the auto document feeder or place your single-page document **Face Down** on the document glass.

2. Press **Function** ▲/▼ key until the following 「**Scan to USB**」 mode is shown in the LCD display.



3. Confirm or change options as desired such as Density, Resolution, Paper Supply, or Paper Size.

Press ▶ or ◀ to select the setting.

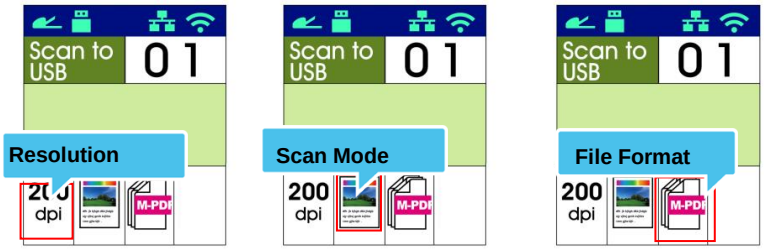

Press ▲ or ▼ to select the option.

Resolution	Choose the resolution of the scanned image. The higher the value, the more details can be reviewed yet more disk space will be required. Choice: 150/***200***/300/600 dpi 150 dpi: Suits to be viewed on the screen. 200 dpi: Suits for most business document. 300 dpi/600 dpi: High quality image helps increase OCR (optical character recognition) accuracy.
Color Mode 	Choose your desired color mode. Choice:  ***Color*** 、 Gray 、 Black and White
File Format 	Choose your desired file format for the scanned image. Choice: ***MPDF (Multi-Page PDF)***、PDF (One-Page PDF)、JPG、TIFF.
*** Default settings in italic bold style.**	

4. Press the [**Start**] button () on the control panel to start scanning your documents.

4. Setting up and Managing Destinations

This section provides procedure for the administrator to setup and manage your destinations including e-mail addresses or network folders to distribute the scanned document on the network.

Setting up Your Address Book

This section provides procedure for the administrator on how to setup Address Book which includes e-mail address and fax number.

Adding a New Member

To add a new member,

1. Obtain the product's IP address by pressing the [**Menu**] key on the control panel and then choose [**Information**]>[**IP Address**]. The product's IP address will be displayed.
2. Open your browser.
3. Type the product's IP address on the URL field of your browser. For example, 10.1.20.25. The following embedded web page will be displayed

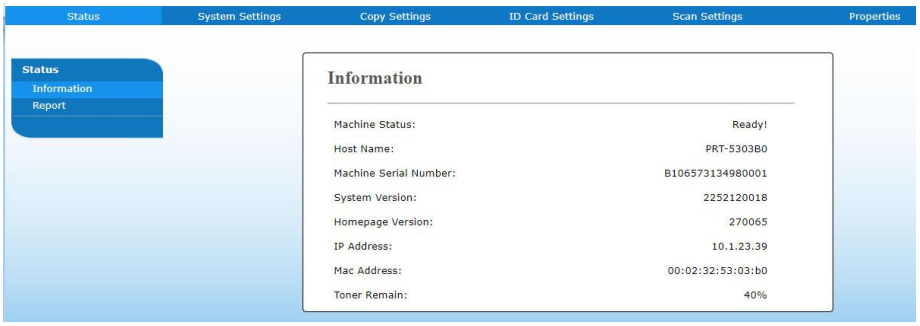

4. On the product's web page, choose [**Properties**] and then choose [**Address Book**] on the left side. The following [**Address Book**] page will be displayed.

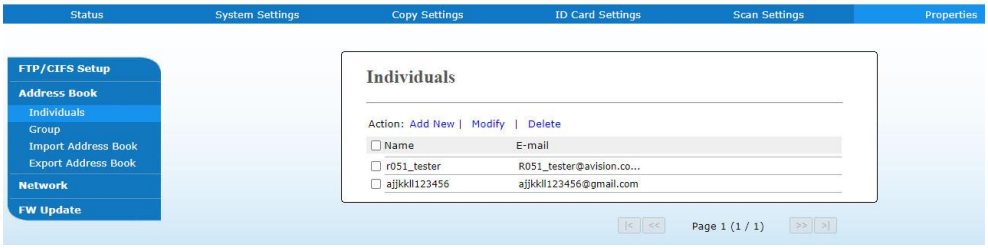

5. Choose [**Add New**] to prompt the following page.



6. Enter the name, and e-mail address for an individual recipient.

7. After completing entering the settings, click「**Submit**」to finish. The new recipient will be displayed in the e-mail list. This means you have successfully created an address book.

Modifying a Current Member

To modify a current member,

1. Repeat Step 1 to Step 4 from the previous section, *Adding a New Member*. The [**Address Book**] page appears.
2. Choose the member you want to modify from the list and then choose [**Modify]** to prompt the [**Modify Member**] page.
3. Modify your member information. Click [**Submit**] to save the setting or [**Cancel**] to leave the page without saving any setting.

Deleting a Current Member

To modify a current member,

1. Repeat Step 1 to Step 4 from the previous section, *Adding a New Member*. The [**Address Book**] page appears.
2. Choose the address you want to delete from the list and then choose [**Delete**] to erase the address. A Confirmation dialog box appears to confirm your deletion. Click [**OK**] to confirm or [**Cancel**] to exit.

Adding a New Group

To send multiple recipients simultaneously at one time, you can create groups to speed up the process. Up to 5 members can be included in one group and a total of 10 groups can be created.

Follow these steps to create a new group,

1. Repeat Step 1 to Step 4 from the previous section, *Adding a New Member*. The [**Address Book**] page appears.
2. Click [**Group**] and then choose [**New]** to prompt the [**Add a New Group**] page.
3. Enter your group name.
4. Choose the address from the right side and click ← to add a member to the group.
5. Click [**Submit**] to save the setting or [**Cancel**] to leave the page without saving any setting.

Modifying a Current Group

To modify a current e-mail group,

1. Repeat Step 1 to Step 4 from the previous section, *Adding a New Member*. The [**Address Book**] page appears.
2. Click [**Group**] and choose the group you want to modify from the list and then choose [**Modify]** to prompt the [**Modify Group**] page.
3. Modify your group information. Choose the group member you wish to add and then click ← to add the new member or click → to delete an old member from the group.
4. Click [**Submit**] to save the setting or [**Cancel**] to leave the page without saving any setting.

Deleting a Current Group

To delete a current e-mail group,

1. Repeat Step 1 to Step 4 from the previous section, *Adding a New Member*. The [**Address Book**] page appears.

2. Click [**Group**] and choose the group you want to delete from the list and then choose [**Delete**] to erase the group. A Confirmation dialog box appears to confirm your deletion. Click [**OK**] to confirm or [**Cancel**] to exit.

Importing External Address Book

The product allows you to import external address book from other devices in a .csv format to save your time in typing all the addresses. Before importing external address book to this product, be sure an address book file in .csv format has been created in advance.

To import current address book,

1. Repeat Step 1 to Step 4 from the previous section, *Adding a New Member*. The [**Address Book**] page appears.

2. Click [**Import Address Book**] to prompt the [**Import Address Book**] page.

3. Click [**Browse**] to search the address book file on your computer.

4. Click [**Import**] to start importing the address book file. In a second, the imported address book will be added in the product.

Exporting Current Address Book

The product allows you to export current address book of this device to another device in a .csv file format.

To export current address book,

1. Repeat Step 1 to Step 4 from the previous section, *Adding a New Member*. The [**Address Book**] page appears.
2. Click [**Export Address Book**] to prompt the [**Export Address Book**] page.
3. Click [**Export**] and then [**Browse**] to specify the location of your address book.
4. Click [**Apply**] and the current address book will be stored in a .csv file.

Setting up Your File Destinations

The section provides procedure on how to setup your file destinations to send your scanned document to a specified network folder.

Adding a New File Destination

To create a new file destination, follow these steps:

1. On the product's web page, choose [**Properties**] and then choose [**FTP/CIFS Setup**] on the left side. The following [**New File Destination**] page will be displayed.

   Enter the following information respectively:

Item	Description
Destination Name	Enter the name of your destination. The name will be shown in the LCD screen.
Protocol	Enter the type of protocol of your destination server. **Choice: FTP, FTPS, CIFS**
URL	Enter the IP address and the shared folder name of your FTP server.
Port #	Enter the port number of the destination server. ***** 21 (FTP), 139 (CIFS), 990 (FTPS)
Login Name	Enter the user name of the destination server.
Password	Enter the password of destination server.
Retype Password	Choose your desired scan option profile.

2. Click [**Submit**] to save the setting or [**Cancel**] to leave the page without saving any setting.

Modifying a Current File Destination

To modify a current file destination,

1. Repeat Step 1 to Step 2 from the previous section, *Adding a New File Destination*. The [**New File Destination**] page appears.
2. Choose the destination you want to modify from the list and then choose [**Modify**] to prompt the [**Modify File Destination**] page.
3. Modify your destination information.
4. Click [**Submit**] to save the setting or [**Cancel**] to leave the page without saving any setting.

Deleting a Current File Destination

To delete a current file destination,

1. Repeat Step 1 to Step 2 from the previous section, *Adding a New File Destination*. The [**New File Destination**] page appears.

2. Choose the destination you want to delete from the list and then choose [**Delete**] to erase the destination. A Confirmation dialog box appears to confirm your deletion. Click [**OK**] to confirm or [**Cancel**] to exit.

5. Customizing the Product's Settings

This chapter is specifically targeted to the persons who are responsible for the administration of the product. It is recommended that the administrator read this chapter before installing the machine.

The product's settings can be customized via the control panel or the product's embedded web page. How to customize the product's settings via these two methods will be described in the following sections.



Note:
When installing the product for the first time, it is recommended that the Administrator retain the default system settings. The settings can be customized at a later date once you are familiar with the operation and functionality.

Customizing System's Settings via the Control Panel

To change the default settings on the control panel, press the "menu" button on the control panel. The menu information will be displayed. To navigate the menu items, the **Enter**, **Up**, **Down**, and **Back** buttons are provided on the control panel. You can adjust settings (e.g. set the paper size for Tray 1) or view information (e.g. IP address, firmware version).

Typical steps in using the menus are as follows:

1. Press the **Menu** button to access the menu items.
2. Press the ▲ **Up** or **Down** ▼ button repeatedly until the desired menu is highlighted in the displayed list.
3. Press the [**OK**] button to select this menu.
4. Press the ▲ **Up** or **Down** ▼ button repeatedly until the desired item is highlighted.
5. Press the [**OK**] button to select this item.
6. Press the ⮌ **Back** button to go back to the previous screen.
7. Press the **Cancel** button to leave the menu item.

Customize System's Settings via the Embedded Web Page

Note: Any update of the web page requires administrator's login.

You may choose your network connection type through the webpage.

1. Obtain the product's IP address by pressing the [**Menu**] key and select [**Information**]>[**IP Address**]. The IP address will be displayed.

2. Open your browser and type the product's IP address on the URL address, for example, http://10.1.20.80 and press Enter. In a second, the embedded web page will be displayed.

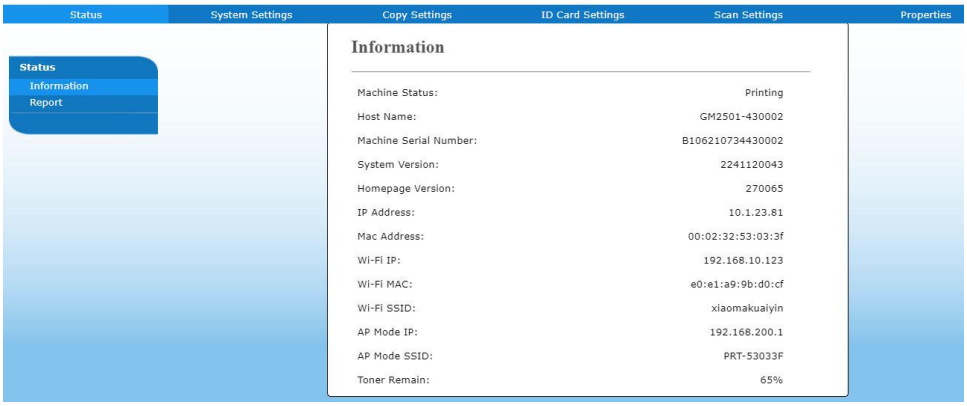

3. Enter your desired setting on your selected items.

Setting Items to be Customized

Status (Available only on the webpage)

Displays the status and basic information of the product.

Item	Description
Information	Display the following basic information of the product.
Machine Status	Displays the machine status.
Host Name	Displays the host name.
Machine SN	Displays the machine's series number.
System Version	Displays the firmware version.
Homepage Version	Displays the version of the embedded web page.
IP Address	Displays the IP address.
Mac Address	Displays the Mac address.
Wi-Fi IP	Displays the Wi-Fi IP address.
Wi-Fi Mac	Displays the Wi-Fi Mac address.
Wi-Fi SSID	Displays the Wi-Fi SSID name.
AP Mode IP	Displays the product's IP address when connecting Wi-Fi in AP mode.
AP Mode SSID	Displays the product's SSID when connecting Wi-Fi in AP mode.
Toner Remain	Displays the toner remain of the toner cartridge.
Report	Selects to print each report. (not available for duplex print)
Config.	Choose to print the setting information of the product.
Network	Choose to print the network information of the product.
Menu Map	Choose to print all the menu items on the LCD screen.
Usage	Choose to print the usage report including the number of copies, toner usage information, EP usage information, and fuser usage information.
Add. Book	Choose to prints the address information of the product.

Network (Available only on the LCD Screen)

*Factory Default

Item	Description	Choice
Network	**Network Filter:** Specify if you wish to enable or disable the Network filter configuration. Once enabled, your can specify the filter mode to allow some IPs to access the device or deny some IPs from accesing the device via the product's embedded web page.	Enable/*Disable

System Settings (Available on the LCD Screen and webpage)

*Factory Default

Item	Description	Option
Language	The language displayed on the LCD screen	*English /繁體中文/简体中文/ Русский (Option varies according to your model)
NTP Server	Assign your NTP server.	
Date/Time	Sets up the current date and time on the product. The time format is 24-hour system.	
Sleep Mode	Choose how long to enter the energy saving mode after your last action.	Eco Mode/5Min/*15Min/30Min/ 1Hr
Auto Off	Choose how long to shut down the product automatically after your last action.	*Off/5Min/15Min/30Min/1Hr/2Hr/4Hr
Schedule Restart	Enable or disable [Schedule Restart]. If select on, enter number of day to restart the device automatically.	* On/Off
Timeout	When the machine has not been operated for a certain period of time, the system will automatically reset all settings back to the preset values. System Timeout Value : 0 ~ 300 seconds. Each selectable interval range is 15 seconds.	* On (60 secs)/Off
Default Mode	Set the default operating mode on the LCD screen.	* Copy, ID Card Copy, Scan to USB, Scan to CIFS/FTP, Scan to E-mail, Duplex Copy
Paper Size	Choose default paper size.	*A4/LTR/LGL/A5
Media Type	Choose default media type.	Thin/*Plain/Thick/Laser/Bond

Management		
Factory Def.	Reset all settings to factory default values.	
Reset Count	Choose to reset count for roller or pad after replacement. Click [immediate] to reset count.	ADF Pad/ADF Roller/Tray 1 Pad/Manual Tray Pad
V-Mag Adjustmnet	Choose to adjust the vertical magnification rate of the printer.	-0.4%/-0.2%/*0% +0.2%/+0.4 %
Password Settings		
New Password	Enter a password to enable modifying the web page. Password should be 8~32 characters or digits in length.	
Retype Password	Retype new password.	

Copy Settings (Available on the LCD Screen and webpage)

*Factory Default

Item	Description	Option
Copy Mode	Select your copy mode to enhance your text or pictures.	***Text/Bill/Mixed**
Collate 	Selecting **On** sorts documents by the order, (1,2,3 / 1,2,3 / 1,2,3). Selecting **Off** stacks documents by the order, (1,1,1/2,2,2/3,3,3).	On/***Off** 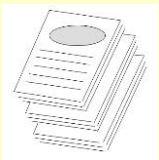 Collated
N-up	Selecting **2 to 1** prints 2 original images reduced to fit onto one sheet of paper. Selecting **4 to 1** prints 4 original images reduced to fit onto one sheet of paper.	***** 2 to 1/4 to 1 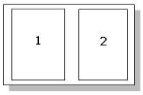 2 to 1 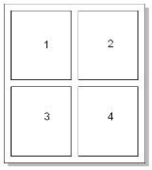 4 to 1
Custom Zoom Default 	**Custom Size (25% ~ 400%)**: Resize your documents from 25% to 400%.	25% ~ 400%
Density	Lighten or darken an image.	1/*2/3/4/5/6/7
Toner Save	Enable or disable Toner Save.	On/*Off

ID Card Copy Settings (Available on the LCD Screen and webpage)

*Factory Default

Item	Description	Option
Layout   	Select an ID Card Copy layout. **Up/Down** – Copy the front and rear side of your ID card on the upper half and bottom half on one side of a sheet. **Right/Left** –Copy the front and rear side of your ID card on the right half and left half on one side of a sheet. **Front/Rear** - Copy the front and rear side of your ID card on the front and rear side of a sheet.	*****Up/Down /Right/Left /Front/Rear
Density	Lighten or darken an image.	1/*2/3/4/5/6/7
Position Adjustment	Slighly adjust the vertical/horizontal position of the scanned image of the ID card.	Up/Down(*****0~177mm), Left/Right(*****0~355mm), Front/Rear(*****0~177mm)

Scan Settings (Available on the LCD Screen and webpage)

*Factory Default Setting

Item	Description	Option
Scan Mode 	Choose your Color Mode to enhance your text or pictures.	B&W/Grayscale/*Color
Resolution	Choose the resolution of the scanned image. The higher the value, the more details can be reviewed yet more disk space will be required. Choice: 150/200/***300**/600 dpi 150 dpi: Suits to be viewed on the screen. 200 dpi: Suits for most business document. 300 dpi/600 dpi: High quality image helps increase OCR (optical character recognition) accuracy.	150/*200/300/600 dpi
File Name	Choose your default file name.	
File Format	Select a file format for the scanned image.	*MPDF (Multi-page PDF)、PDF (One-Page PDF)、JPEG、TIFF
Err Report	Enable to print a transmission report or print a report only when errors.	Off/On/*On Error

Properties (Available on the web page)

Click Properties to show more settings.

FTP/CIFS Setup (Available on the web page)

To send your scanned document to a specified network folder, you need to setup your file destination. To create or modify your file destination, please refer to the preceding section, **Setting up Your File Destination**.

Address Book (Available on the web page)

To send your scanned document to an e-mail address or group, you need to setup your address book. To create or modify your address book, please refer to the preceding section, **Setting up Your Address Book**.

Network (Available on the web page)

Displays the network information of the product.
***Factory Default**

Item	Description	Option
Host Name		
Host Name	Dipslay the host name for the product.	
Ethernet Settings		
Obtain an IP address automatically	*Off/On	
IP Address: Set up an IP address.	Input the IP address of the product.	
Subnet Mask	Input the subnet mask number.	
Gateway	Input the gateway for your IP.	
Auto-Obtain WINS/DNS	*Off/On	
Preferred DNS Server	Sets up the preferred DNS server address for the product.	
Altinate DNS Server	Sets up the altinate DNS server address for the product.	
Preferred WINS Server	Sets up the preferred WINS server address for the product.	
Altinate WINS Server	Sets up the altinate WINS server address for the product.	
Domain Name	Sets up a domain name for the product.	

Wi-Fi Settings		
Search AP	Click [**Search AP**] and the currently connected wireless networks will be displayed. Select the wireless network you want to connect and then enter the security key if required.	
IP Settings	Obtain the IP address directly from the DHCP server or you may enter your static IP on the [**IP Address**], [**Subnet Mask**], and [**Gateway**] field respectively.	
SMTP		
Mail Server	Enter the IP address of your SMTP server.	
SMTP Port #	Enter the port number of the SMTP server. * 25	
Authentication Method	Enter the email authentication method. Choice: *None, SMTP, POP3	
Login Name	Enter the login name for SMTP authentication.	
Password	Enter the password for SMTP authentication.	
Time Zone	Enter the time zone of your location.	
E-Mail		
From	Specify sender's e-mail address. This is a must item to send images to e-mail address.	
Subject	Type the default subject.	
Signature	Specify the signature file of the sender if necessary.	
Reply to	Specify the e-mail address you wish to reply to. If this item is left blank, the [From] address will be used as the [Reply to] address.	
Message	Type the default's e-mail message.	
Network Security Settings		
Security Configuration Filter	Specify if you wish to enable or disable the filter configuration.	*Disable/Enable
Filter Mode	Specify your filter mode to allow some IPs to access the device or deny some IPs from accessing the device's embedded web page.	Allow/Deny
IP Address Filter Configuration	**IP Address Filter Configuration**- Four types of Start IP and End IP can be specified. **Mac Address Filter Configuration**- Up to 10 Mac address can be specified.	IP Address Filter Configuration/ Mac Address Filter Configuration

SNMP

Enable SNMPv1/v2	On/Off
Community name	Define your community name.
Enable SNMPV3	On/Off
User Name	Enter your user name. (1~32 characters)
Authentication Protocol	MD5/SHA
Invalid URL	Enter your invaoid URL address. (8~32 characters)
Privacy Protocol	DES/AES-128
Password	Enter your password. (8~32 characters)
Context Name	Enter your context name.

FW Update

Update the firmware of the product. Before updating the product's firmware, you need to first download the latest firmware from our web site at https://capsuloffice.com/support on your computer. On the webpage, choose [**Browse**] to find the firmware file on your computer and then choose [**Update**] to begin updating the firmware to the product.

*A+ Manager Settings

Check [**Enable**] and then enter the IP address of a specified server to send the system log file to for quick troubleshooting.
*Availability varies according to your model.

Updating The Product's Firmware

Before updating the product's firmware, you need to first download the latest firmware from our web site at www.capsuloffice.com onto your computer.

To update the product's firmware, follow these steps:

1. Refer to the preceding section, **Knowing the Product's Default IP Address**, to get the product's IP address from the DHCP server.

2. Open your browser.

3. Type the product's IP address on the URL field of your browser. For example, 10.1.20.25. The following embedded web page will be displayed

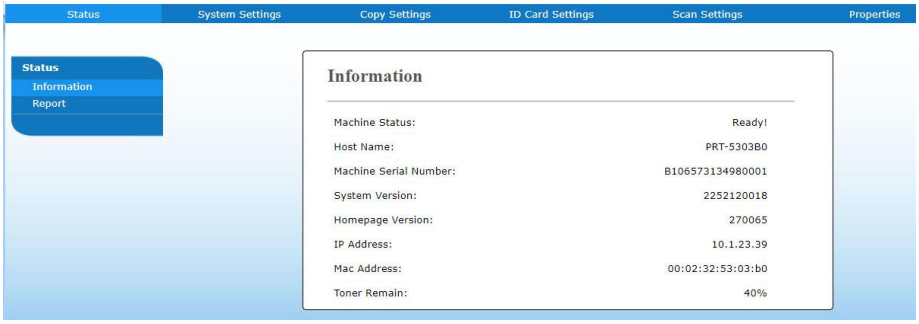

4. On the product's web page, choose [**Properties**] and then choose [**FW Update**] on the left side. The [**FW Update**] page will be displayed.

5. Choose [**Browse**] to find the firmware file on your computer.

6. Choose [**Update**] to begin updating the firmware to the product.

6. Configuring the Printer Driver

Displaying the Printer Driver Properties Dialog Box (Windows)

To display the Printer Driver Properties dialog box,

1. Click **Start** on the system tray and choose **Printers and Faxes**.
2. Right-click the product's printer name and choose **Properties**.



3. The product's Printer Properties dialog box appears.

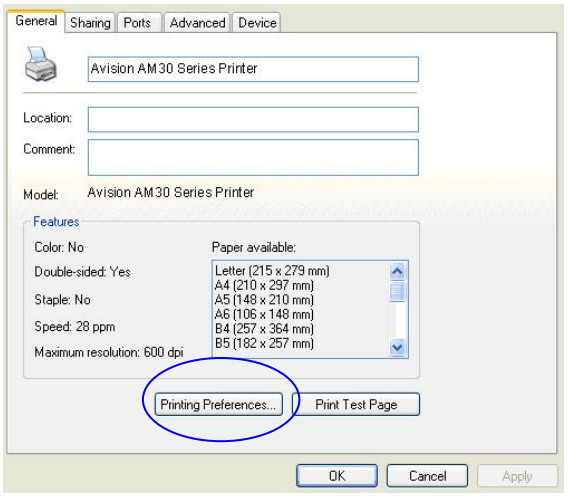

4. Click **Printing Preferences** to prompt the following **Printing Preferences** dialog box.

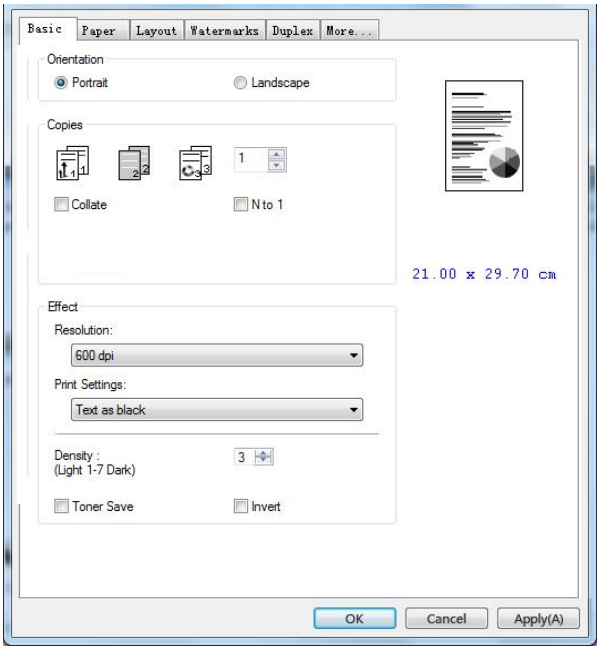

Configuring Printer Driver Settings

The Printing Preferences dialog box consists of the Basic tab, the Paper tab, the Layout tab, the Watermark tab, the Duplex tab, and the More tab. The contents of each tab will be explained in the following sections.

The Basic Tab

The Basic tab contains settings for Orientation, Copies, Effect, Density, Toner Save, and Invert.

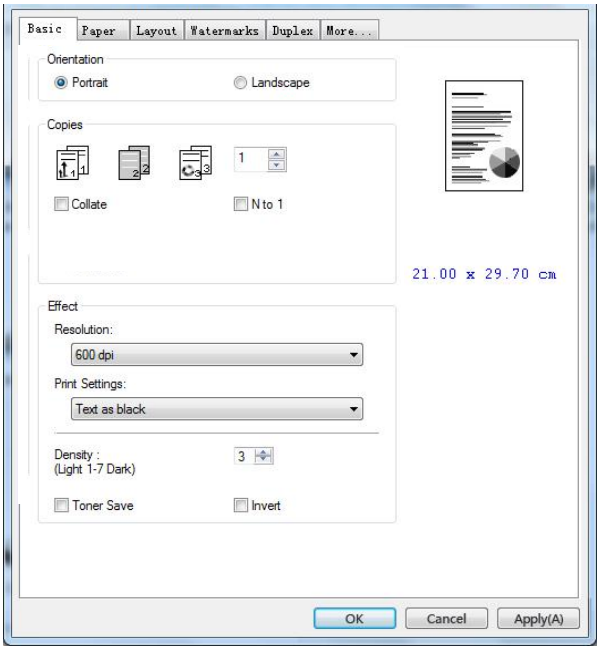

Orientation

Choose your orientation. **Choice: *Portrait, Landscape**

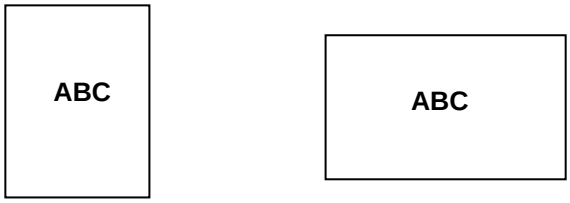

Portrait **Landscape**

* Factory Default

Copies

Choose the number of copies to be printed. You can enter up to 999.

Collated:	Click to print your document in the page order such as 1/2/3, 1/2/3, 1/2/3. 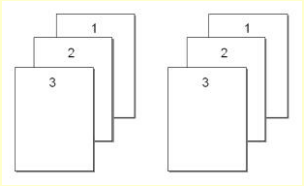
N to 1:	Click to reverse the printing order of your document. As a result, the last page of your document will be printed first and vice versa. 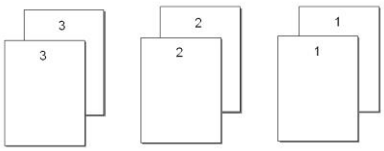

Effect

Resolution:	**Choice: *600 dpi, 1200 dpi HQ** *Option varies due to your printer model. 600 dpi: for normal document. 1200 dpi: Choose 1200 dpi if you wish to enhance the print quality.
Print Settings:	<table><tr><td>Normal:</td><td>Normal mode.</td></tr><tr><td>**Picture Mode:</td><td>Suitable for your document containing pictures.</td></tr><tr><td>Text as Black:</td><td>Print color text in pure black.</td></tr><tr><td>**Enhance Text:</td><td>Make the text bold.</td></tr></table>**** These features are only available for GDI printer language.**
Density:	Click to lighten or darken your document. Density level (1~7). Default: 3
Toner Save:	Allows you to print your document using the toner saving mode.
Invert:	Invert makes each image pixel inverted to its complementary color. For example: the original black text on white background becomes white text on black background.

*Factory Default

The Paper Tab

The Paper tab contains settings for Original Size, Tray, and Media Type.

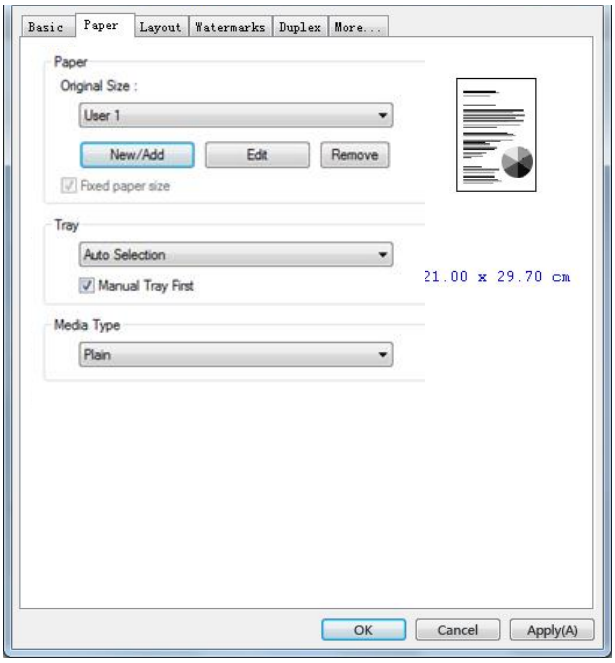

Paper

Original Size:	Choose the size of paper loaded in the designated tray. **Choice: *A4, A5, A6, B5 (JIS), B6 (JIS), Legal, Letter, User Define** Click [Add/New] to create up to 20 sets of custom size.
Tray:	Choose the tray from which your paper should be fed. **Choice: Auto Selection, Manual Tray, Tray 1** ***Manual Tray First:** Automatically select the paper tray which is available (priority: 1: Manual Tray; 2: Tray 1). **Auto Selection:** Automatically select the paper tray which is available (priority: 1: Tray 1; 2: Manual Tray).
Media Type:	Choose the type of media to be used for printing. **Choice: *Plain, Thin, Thick, Laser, Bond**

*Factory Default

The Layout Tab

The Layout tab contains settings for N-up, and Output Paper Size.

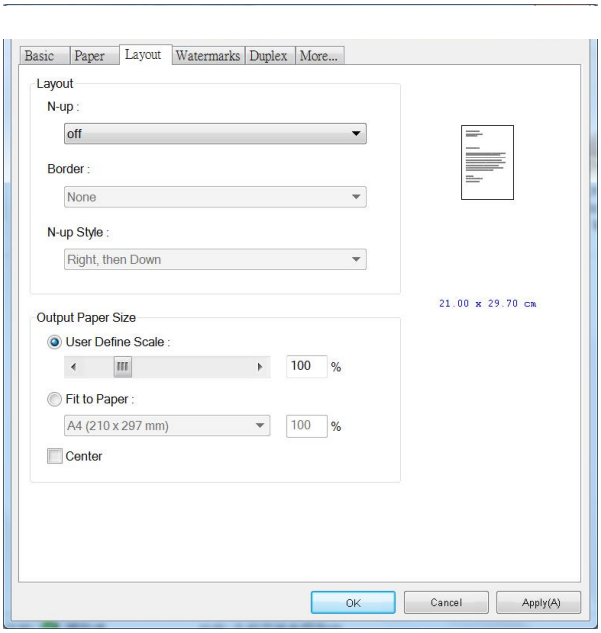

Layout

N-up:	Choose number of pages to be printed on a single sheet of paper. **Choice: *Off, 2up(2-in-1), 4-up(4-in-1), 9-up(9-in-1), 16-up(16-in-1)** 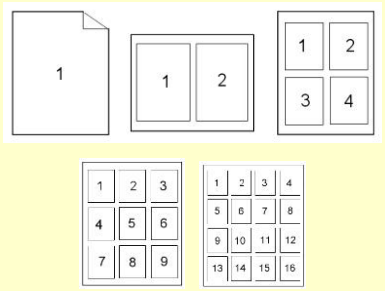
Border:	Choose if you wish to add border around each page when printing more than one page on a single sheet of paper. **Choice: *None, Border Line, Dashed Line** 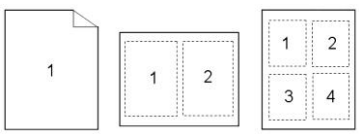

* Factory Default

N-up Style:	Choose the style you want when printing multi-page document on a single sheet. **Choice: *Right, then Down/Down, then Right/Left, then Down/Down, then Left**

Right, then Down

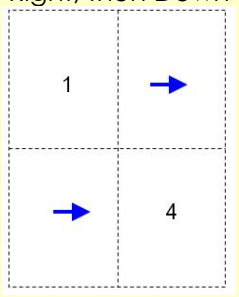

Down, then Left

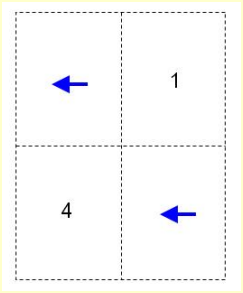

Down, then Right

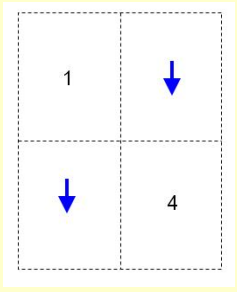

Left, then Down

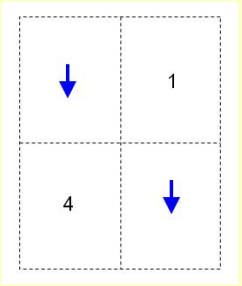

Output Paper Size

User Define Scale	You can reduce or enlarge your printed image using the Slider Bar. **Scaling rate: 25%~400%** *100%
Fit to Paper	Output the full page of the selected original including the four margins.
Center	Print your image in the center of the output paper.

*Factory Default

The Watermark Tab

The Watermark tab allows you to add some text or image (such as CONFIDENTIAL, IMPORTANT, DRAFT, etc) for your document.

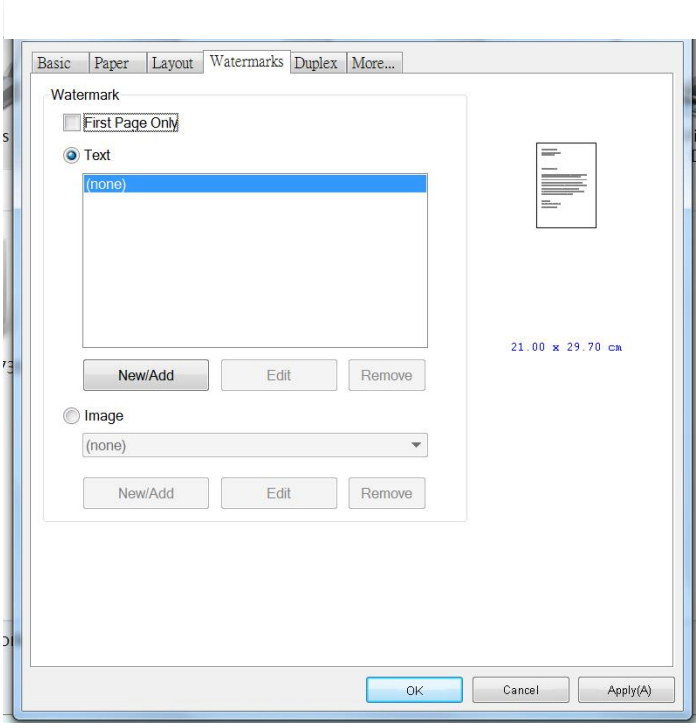

First Page only	Check to print watermark only on the first page. Clear the check box will print watermark on all pages.
Text	Choose and click **New/Add** to add new watermark text. Click the **Edit** button to change or the **Remove** button to delete. 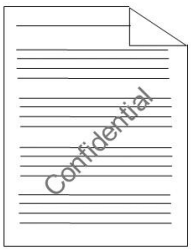
Image	Choose and click New/Add to add watermark image. Click the **Edit** button to change or the **Remove** button to delete. You can choose your image in file format such as BMP, TIFF, or JPEG.

Adding a new watermark text

To add a new watermark text,

1. Choose **Text** and then click the **Add/New** button. The following Watermark dialog box appears.

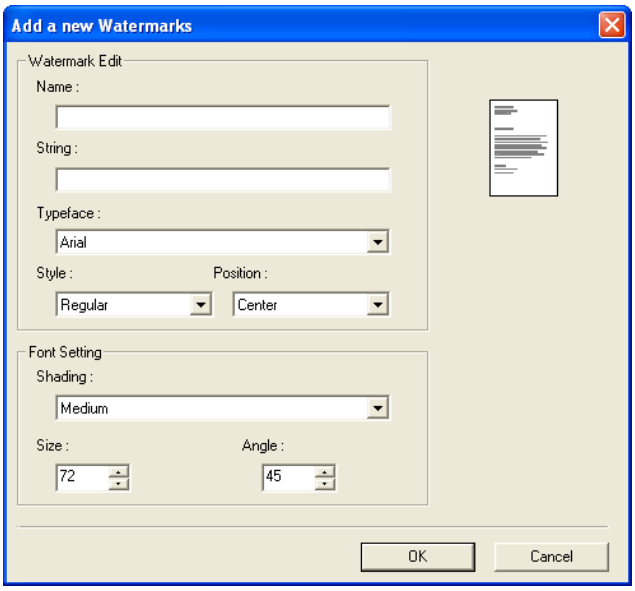

Name	Name your watermark text. This name will be shown in the Watermark text list.
String	Enter your watermark text, such as confidential, important, and so on.
Typeface	Choose your font type for your watermark text.
Style	Choose the style of your watermark text. **Choice: *Regular, Bold, Italic, Bold Italic.**
Position	Choose the position of your watermark text. **Choice: *Center, Tile.**

*Factory Default

Angle	Specify the angle of the watermark text from 0° to 360°
Size	Specify the size of your watermark text from 1 to 288.
Shading	Specify a relative density for the watermark text. **Choice: Lightest, Light, Medium, Dark, Darkest.**

2. Click the **OK** button to save the settings. If the new watermark text is created successfully, the watermark name will be shown in the Text list.

Editing a current watermark text

To edit a current watermark text,

1. Choose the watermark name that you wish to edit from the Text list.
2. Click the **Edit** button. The Watermark Edit dialog box appears.
3. Change your settings for the selected watermark text and choose **OK** to complete.

Removing a current watermark text

To remove a current watermark text,

1. Choose the watermark name that you wish to remove from the Text list.
2. Click the **Remove** button. The watermark text will be removed.

Adding a new watermark image

To add a new watermark image,

1. Choose **Image** and then click the **Add/New** button. The following Watermark dialog box appears.

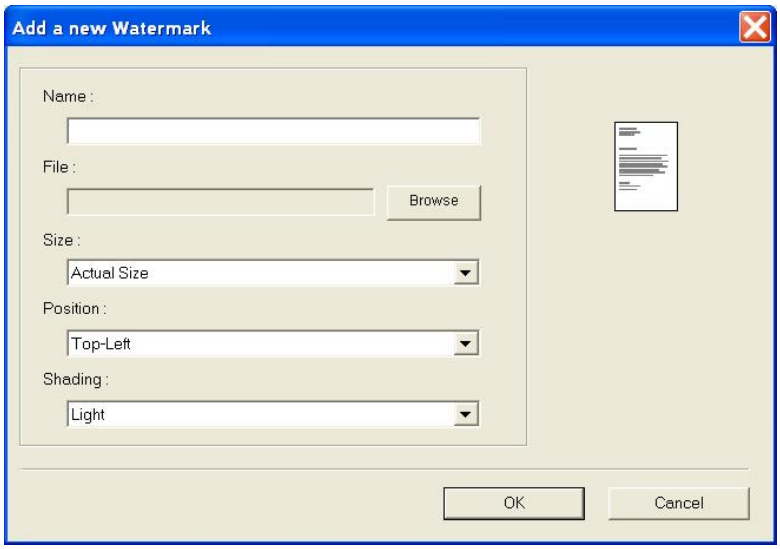

Name	Name your watermark image. This name will be shown in the Watermark image list.
File	Click the **Browse** button to locate your watermark image.
Size	**Specify the size of your watermark image. Choice: *Actural Size, Fit to Page, Tile.**
Position	Choose the position of your watermark image. **Choice: *Top-Left, Top-Center, Top-Right, Center, Center-Left, Center-Right, Bottom-Center, Bottom-Right, Bottom-Left.**
Shading	Specify a relative density for the watermark text. **Choice: Lightest, *Light, Medium, Dark, Darkest.**

* Factory Default

2. Click the **OK** button to save the settings. If the new watermark image is created successfully, the watermark name will be shown in the Image list.

Editing a current watermark image

To edit a current watermark image,

1. Choose the watermark name that you wish to edit from the Image list.
2. Click the **Edit** button. The Watermark Edit dialog box appears.
3. Change your settings for the selected watermark image and choose **OK** to complete.

Removing a current watermark Image

To remove a current watermark image,

1. Choose the watermark name that you wish to remove from the Image list.
2. Click the **Remove** button. The watermark image will be removed.

The Duplex Tab

The Duplex tab allows you to print your document on two sides of the paper.

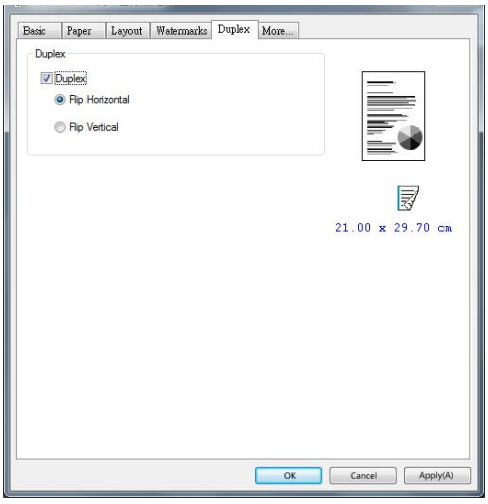

When using **Two-Sided** printing, you can select whether to bind copies on the long-edge or short-edge.

Long Edge (Binding)	**Long-Edge binding (Portrait)** will print the pages so that you flip them like you would do on a **book**.  Long-Edge binding (Portrait) 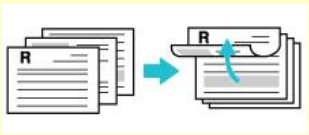 Long-Edge binding (Landscape)
Short Edge (Binding)	**Short-Edge binding (Portrait)** prints them so that your flip them like you would do on a **calendar**.  Short-Edge binding (Portrait)  Short-Edge binding (Landscape)

* Factory Default Setting

Note: The duplex feature supports only page sizes of A4, B5 (JIS), and letter with paper weight between 60g/m^2 and 105g/m^2.

The More Tab

On the **More** tab, a **Wait Timeout** option is provided to set the amount of time the MFP waits for data to come from computer during a job. If the data stream pauses for longer than the specified number of seconds, the job is cancelled.

Permitted timeout values: 60~1800 seconds, default timeout values: 300 seconds

Clean Mode: If unwanted image appears in the blank space, you can check "Clean Mode" to improve the printing quality.

Uniform Mode: If uneven shading appears in the image area, you can check "Uniform Mode" to improve the printing quality.

Defaults: Press to change all setting values back to factory default.

Clean Page: After pressing the button, the machine will immediately print a cleaning chart to clean the excessive toner in the printer.

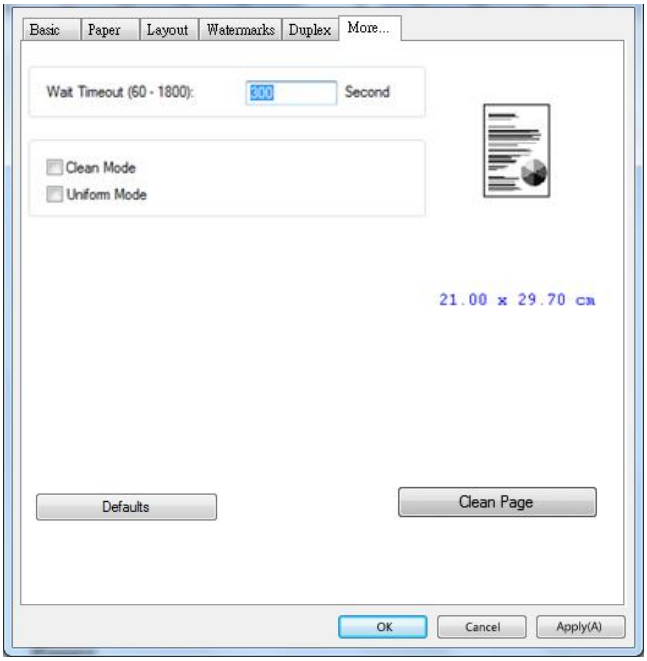

7. Printing Documents from a Mobile Device

For the model comes with a Wi-Fi module, the product can be converted into a wireless device and your mobile device is able to print emails and documents by simply tapping Print from the menu. (The availability of Wi-Fi function varied according to your model name.)

Making Preparation

To connect the product to a wireless LAN, prepare the followings:

- **An environment in which a wireless LAN is available**

When connecting the scanner to a wireless LAN, you may need information for a wireless access point such as an SSID (network name) and a security key (password). For details, contact your Network Administrator or refer to the manual for the wireless access point.

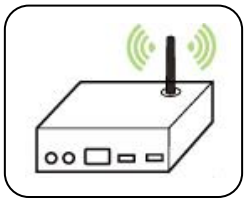

Attention!

Do not place obstacles that block radio waves (e.g. walls or metal plates) or devices that cause radio wave interference (e.g. cordless phones) within 100 mm of the product, or near your wireless access point.

- **Mopria Print Service**

The Mopria Print Service (app) can be downloaded from the Google Play Store to enable print functionality on any Android phone or tablet (Android version 4.4 or later). Once installed, simply connect your device to the same network as the printer and your mobile print can be completed.

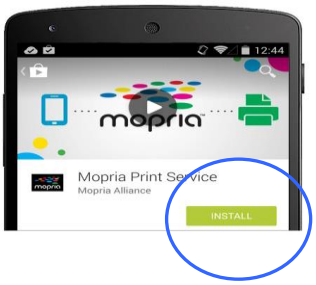

Connecting to a Wireless Network via the Network Setup Tool

Before You Begin!
- Make sure the computer has been connected to the product via the USB cable.
- Make sure the power adapter has been connected and the product has been turned on.

The **Network Setup Tool** is an application to configure the settings required for connecting the product via wireless LAN. The **Network Setup Tool** can be used to configure the following wireless or wired settings:

- Connecting the product to a wireless access point
- Connecting the product to a wired network
- Setting the IP address for the scanner

1. Launch the program by clicking the **Start>All Programs>Capsul MB3300 MFP>Network Setup Tool**. The main window appears.

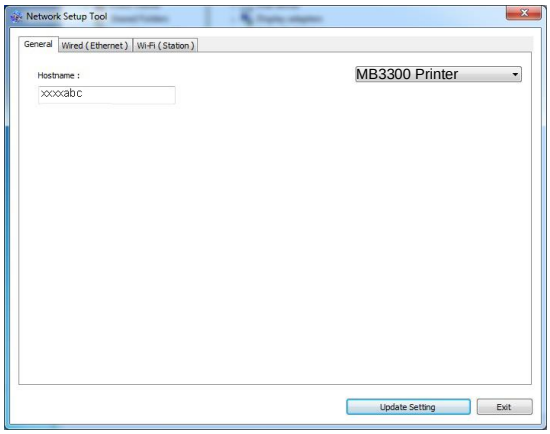

2. On the [**General**] page, check [**Wi-Fi (Station)**].
3. Click the [**Wi-Fi (Station)**] tab to prompt the [**Wi-Fi (Station)**] page.

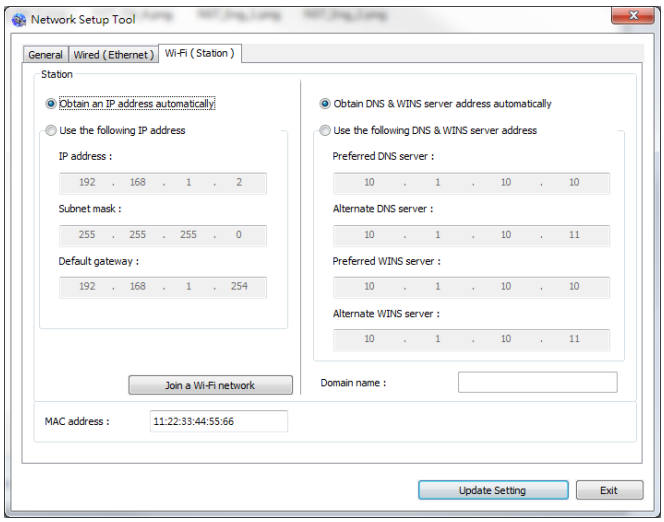

4. Check [**DHCP**] to obtain the IP address directly from the DHCP server or you may enter your static IP on the [**IP Address**], [**Subnet Mask**], and [**Gateway**] field respectively.

5. Click [**Connect to SSID**] and the currently connected wireless networks will be displayed. Select the wireless network you want to connect and then enter the security key if required.

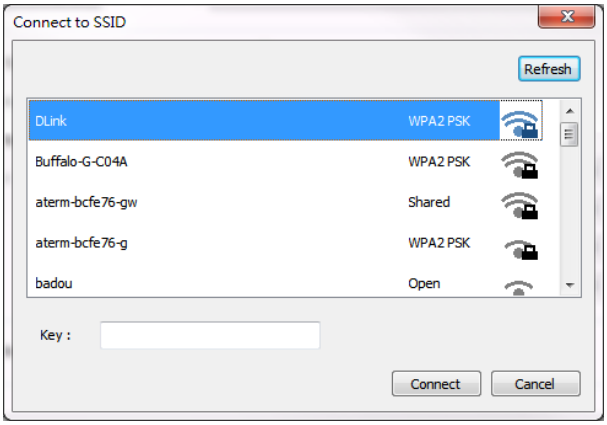

6. Click [**Connect**] to start connecting the SSID (wireless network name) and then update the IP information to the product.

7. If update is successfully, an [**Update Device Successfully**] message will be displayed and the Network Setup Tool will be automatically closed.

Printing Your File from a Android Mobile Device

Make sure that the Mopria Print Service (Print App) has been installed on your Android mobile device. The **Mopria Print App** can be purchased for free from an application store such as Google Play.

1. Select the same wirelss network as your PRINTER.

On your mobile device, tap **Settings**>**Wi-Fi** and choose the same network name (SSID) of your PRINTER.	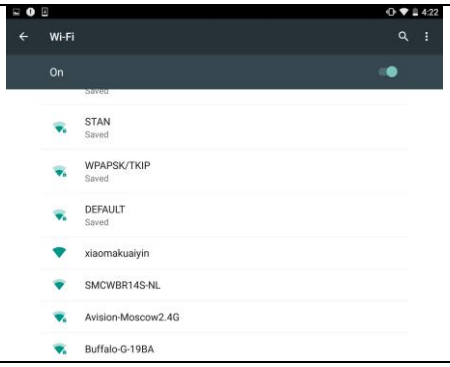

2. **Turn Mopria Print Service on.** The device will search available PRINTERs.

On your mobile device, tap **Settings**>**Printing**>**Mopria Print Service** to turn Mopria Print Service on. The Device will search for all available PRINTERs.	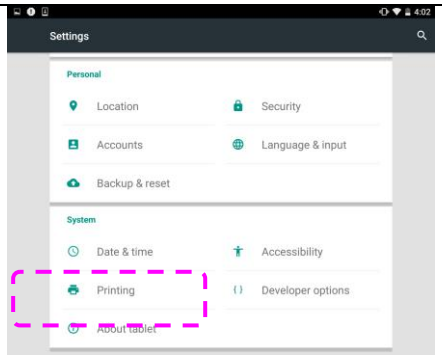
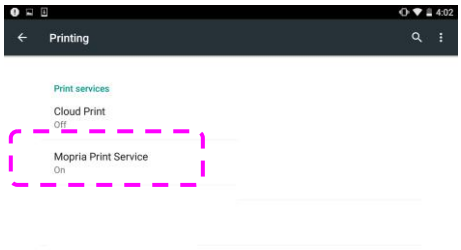	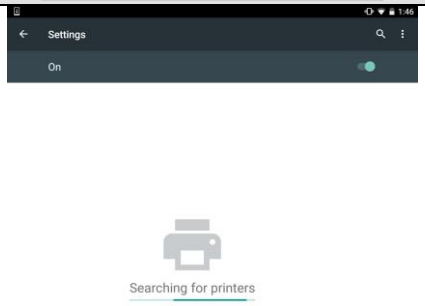

3. Select your PRINTER.

Select [**XXX at XXX**] from the PRINTER list. (XXX=Modellnummer)	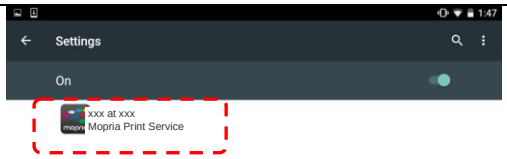

4. Open the file which you want to print.

Open the file you want to print.	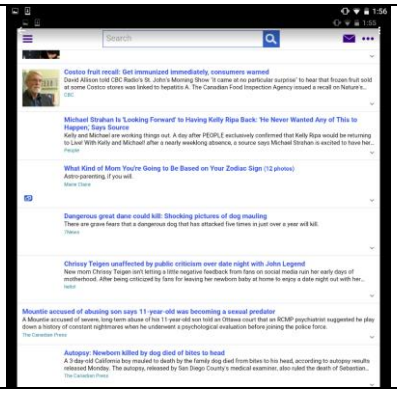

5. Choose [**Print**] from the menu and select your PRINTER.

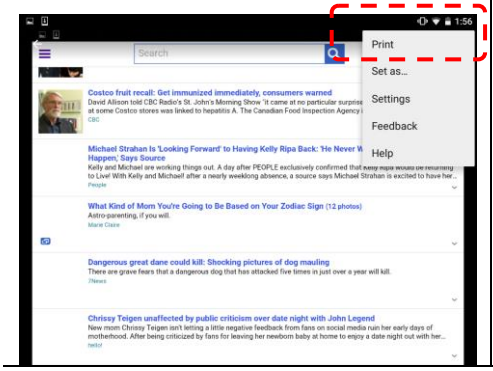	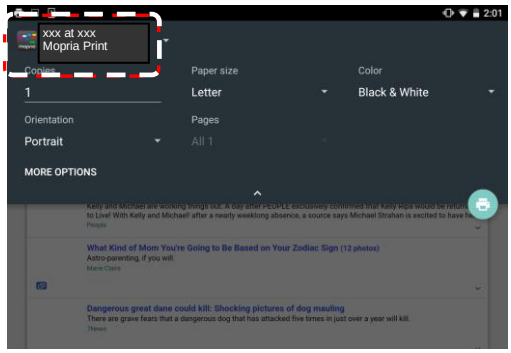

6. Choose print settings and print.

- If you do not need to change print options, tap **Print** to send the print job.
- If you need to change print options, continue to the next section.

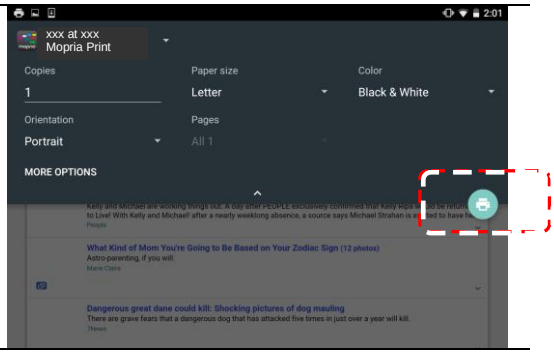

Printing Your File from a iOS Mobile Device

1. Turn on your mobile devices such as iPhone or iPad.
2. Tap 「**Settings**」 and then open Wi-Fi. Select the network same with your PRINTER.
3. Open the picture or the document that you want to print. Tape the Share icon ( ) and then the print icon ( ).

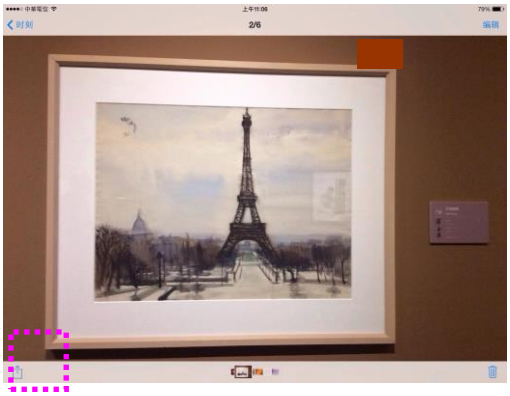

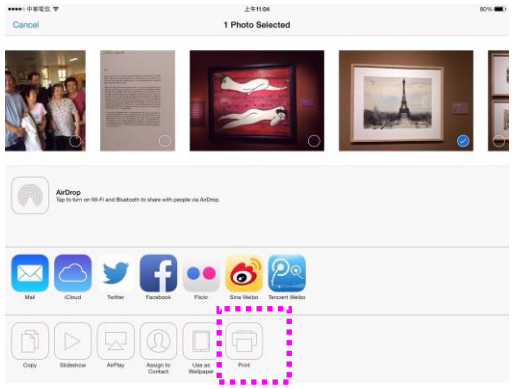

4. Tap [Select PRINTER] and choose your desired PRINTER. (xxx=model name)

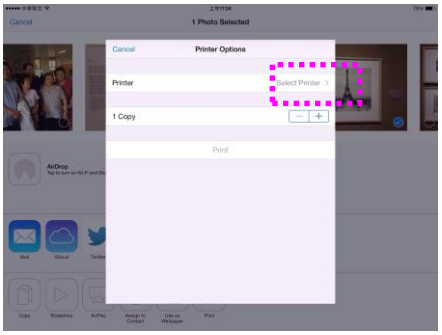



5. Tap [Print] to start printing.

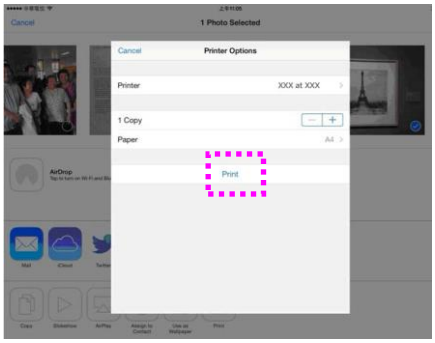

8. Scanning From Your Computer

After installing the scanner driver and connecting the USB cable to your computer, the product can be used as a fine scanner. You can use various scanning features to modify your scanned image.

Scanning via Other Applications

1. Start your image editing application.
2. Pull down the **File** menu and choose **Select Source**.

   If the **Select Source** command is not available on the **File** menu, see your application's user's guide to determine how the TWAIN link is used. A dialog box with a list of scanning sources appears.
3. Select the model name of your product.

   You need to select the source only once, unless you want o choose another scanner.
4. Place the document **FACE DOWN** on the flatbed glass.
5. Pull down the File menu and choose **Acquire**.

   A dialog box containing scanning features appears.

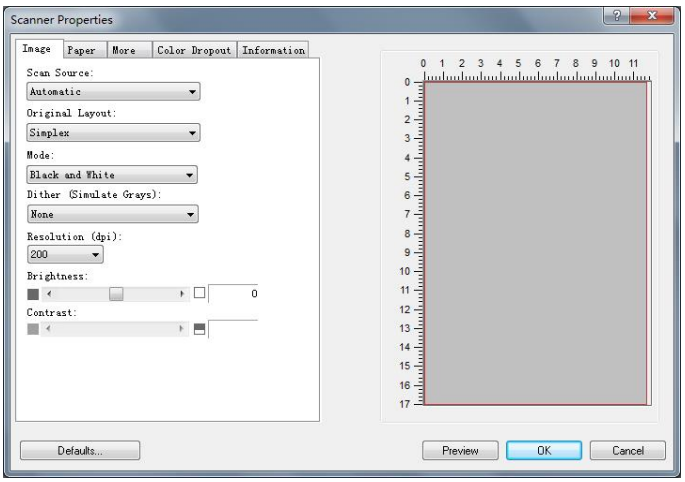

6. Select the scanning method you want to use on the **Scan Source** drop-down menu.

7. Select the mode you want to use for your scans on the **Image Mode** drop-down menu.

8. Select a scanning resolution on the **Resolution** drop-down menu.

9. Select the setting for the scanning features (e.g. Brightness, Contrast, Original Layout, etc.) that you want to use.

10. Click on **Preview** or **Scan** to preview or scan you documents.

A Glance of the User Interface

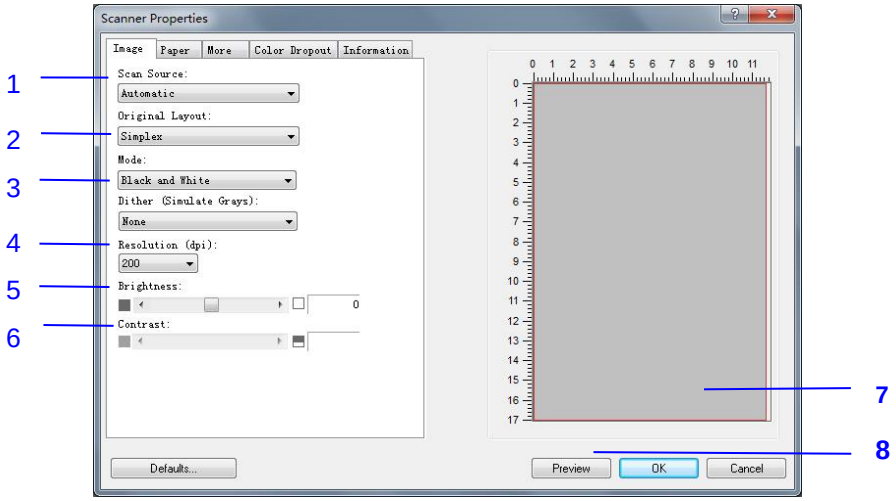

1. Scan Source	**Choice:** Auto, ADF, Flatbed
2. Original Layout	**Choice:** Simplex
3. Mode	**Choice:** Black & White, 8-Bit Gray, 24-Bit Color
4. Resolution	**Choice:** 75, 100, 150, 200, 300, 400, 500, 600, 1200 (dpi).
5. Brightness	Adjust the brightness level from –100 to +100.
6. Contrast	Adjust the contrast level from –100 to +100.
7. Preview Window	Used to display the scanned image in low resolution.
8. Preview	Used to resize your scanned area.

Selecting A Proper Image Mode

Black & White: Choose B&W if your original contains only B&W text, pencil or ink sketch.

8-bit Gray: 8-bit Gray images contain actual shades of gray.

24-bit Color: Choose 24-bit Color if you wish to scan a color image.

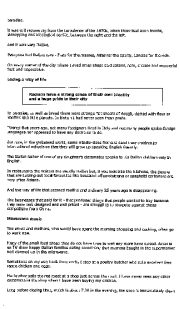

B&W



Gray

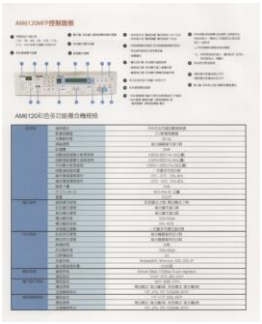

Color

Dither (Simulate Grays):
This is the process of converting a grayscale or color image to a bi-tonal image. There are several different methods of performing this conversion. **Options: None, Halftone 1~5, Diffusion**. Default setting is none.

Halftone:
In addition to the black and white display, halftone can present a somehow gray shade of image by using different size of dots. Halftone image looks like the picture you have seen in the newspaper. **Options include Halftone 1, Halftone 2, Halftone 3, Halftone 4, Halftone 5.**

Diffusion:
Diffusion is a type of halftone. Diffusion gives good image texture and makes text in images more readable than halftone.



Error Diffusion Image

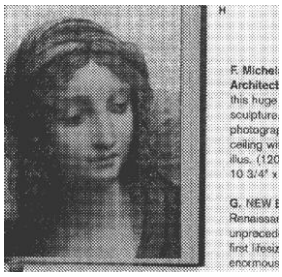

Halftone Image

Determining Proper Resolution

A proper resolution reproduces a clear image with good details. The resolution is measured by dots per inch (dpi). The resolution is measured in pixels per inch (ppi) (sometimes referred to as dots per inch or dpi). Higher resolutions result in more detail in the scan, slower scanning and in general, greater file sizes. For example, an A4 size color image scanned at 300 dpi with color mode consumes approximately 25 MB of disk space. When OCR (Optical Character Recognition) is to be performed on a scan, 300dpi should be used for most languages except Asian languages. For Asian languages, 400 dpi is recommended.

Choose a resolution value from the drop down list. The default value is 200 dpi. Available resolutions are 75, 100, 150, 200,300, 400, 500, 600 and 1200.



Resolution: 75 dpi



Resolution: 150 dpi

Adjusting Brightness And Contrast

Brightness

Adjusts the lightness or darkness of an image. The higher the value, the brighter the image. Drag the slider to the right or left to increase or decrease the brightness. The range is from –100 to +100. The default value is 0.

Contrast

Adjusts the range between the darkest and the lightest shades in the image. The higher the contrast, the bigger the different grayscale. Drag the slider to the right or left to increase or decrease the contrast. The range is from –100 to +100. The default value is 0.

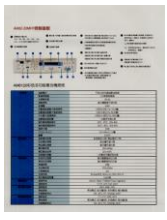

Brightness: -50

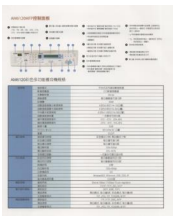

Brightness: 0 (Normal)

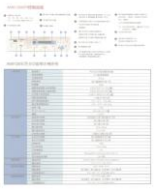

Brightness: +50

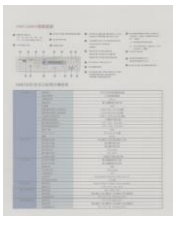

Contrast: -50

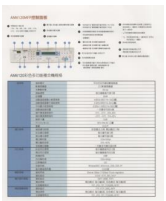

Contrast: 0 (Normal)

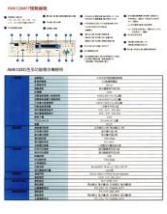

Contrast: +50

Choosing Scan Source

Choice:

Flatbed: Select this setting if you need to scan a single page from the flatbed.

***Auto**, **ADF**—Use this setting if you are using the automatic document feeder (ADF) to scan documents at a time.

Preview Window

Click the Preview button to get a scanned image in a low resolution. You can use this window to select your scan area.

Using The Paper Tab

Selecting Your Scan Size

Custom: Choose **Custom** from the **Cropping** drop-down list on the **Paper** tab. This feature allows you to define the area or zone to be scanned. If you select this option, you can enter the x and y offset values, width and length to redefine your scanned area. The Display window will show the size as you change the values.

Choose your scan size from the **Scan Size** drop-down list.

None
US Letter- 8.5"x 11"
US Legal – 8.5" x 14"
ISO A4 – 21 x 29.7 cm
ISO A5 – 14.8 x 21 cm
ISO A6 – 10.5 x 14.8cm
ISO A7 – 7.4 x 10/5 cm
ISO B5 – 17.6 x 25 cm
ISO B6 – 12.5 x 17.6 cm
ISO B7 – 8.8 x 12.5 cm
JIS B5 – 18.2 x 25.7 cm
JIS B6 – 12.8 x 18.2 cm
JIS B7 – 9.1 x 12.8 cm
Scanner Maximum
Long Page (<118")

The following options are only available when **Custom** is selected.

X-Offset — the distance from the left end of the scanner to the left edge of the scanning area.

Y-Offset — the position from the top end of the document to the top end of the scanning area.

Width — the width of the scanning area.

Length — the length of the scanning area.

Center — automatically calculates the x-offset for center-fed feeding based upon document size selected.

Unit: Define your measurement system. **Inches, Millimeters,** and **Pixels** are available.

Using The More Tab

Enabling Multi-Feed detection

The multi-feed detection feature allows you to detect overlapped documents that go through the scanner. Multi-Feed usually occurs due to stapled documents, adhesives on documents, or electro-statically charged documents.

Additional Length Detection: Additional Length Detection allows you to define the length of document being multi-fed. This value indicates the additional length exceeding your scan area. A value of 0 indicates no additional length detection. For the specified measuring unit, please refer to the Unit drop-down list box on the Paper tab. Once multi-feed is detected, the scanning operation will not be stopped. Instead, a multi-feed detection message will be displayed.

Using The Information Tab

The **Information** Tab allows you to view all the information about the scanner including serial number, pad count, roller count, and firmware version. These are helpful information when you report a problem to the service personnel.

9. Maintaining the Product

Cleaning The Glass

The product is designed to be almost maintenance-free. However, it still needs to be cleaned occasionally to ensure optimum image quality and performance.

To clean the glass,

1. Open the document cover as shown below.
2. Dip a soft clean cloth with isopropyl alcohol (95%).
3. Gently wipe the flatbed glass and the white sheet beneath the document cover to remove the dust or any toner particles.
4. Close the document cover. Your machine is now ready to use.

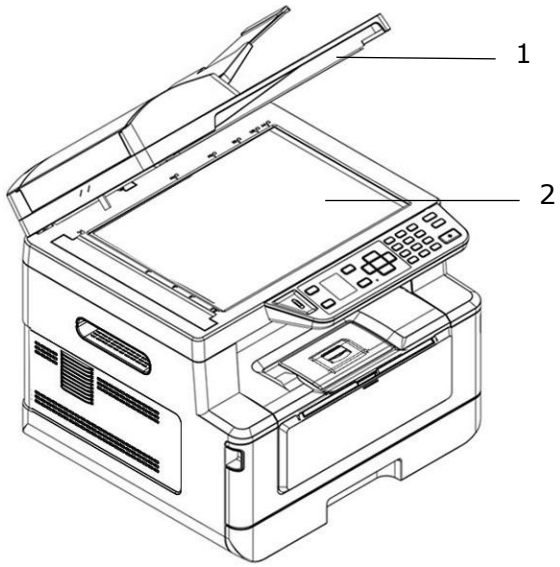

1. Document Cover
2. Flatbed Glass

Cleaning the ADF

From time to time the pad assembly and feeding rollers may become contaminated with ink, toner particles or paper dust. In this case the product may not feed documents smoothly. If this occurs please follow the cleaning procedures to return your machine to its original state.

1. Moisten a clean lintless cloth with isopropyl alcohol (95%).
2. Gently open the ADF front cover. Wipe the feeding rollers from side to side.

   Rotate the rollers forward with your finger and repeat the above cleaning procedures until the rollers are clean. Be careful not to snag or damage the pick springs.
3. Wipe the rubber part of the ADF snap-in pad.
4. Close the ADF unit. Your machine is now ready to use.

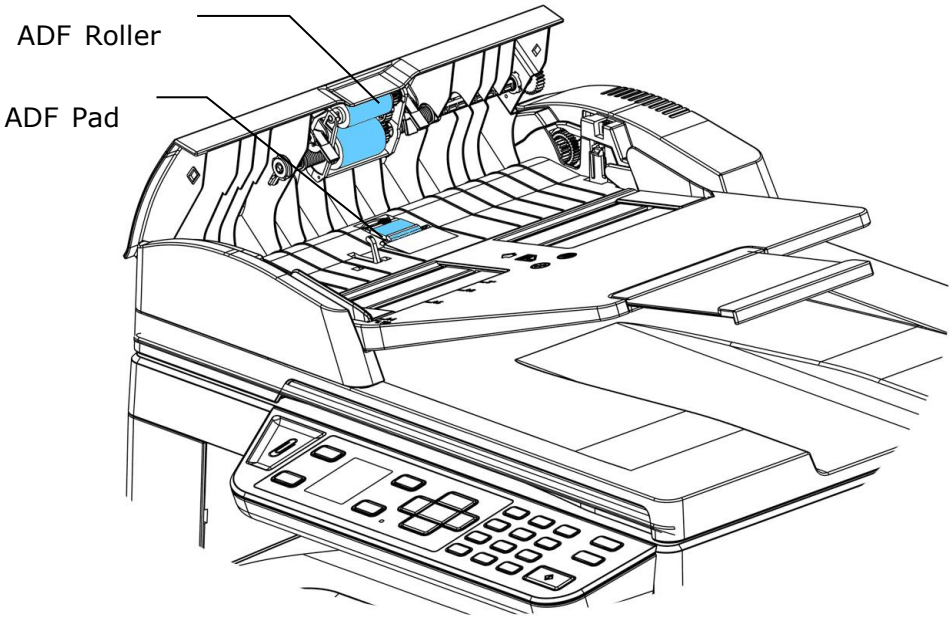

Cleaning the Pad in the Cassette

If the Pad in the Cassette is smeared with paper powder or dirt or every 30K copies, paper may not feed smoothly or noise occurs during paper feeding. Follow the procedure below to clean the Pad in the Cassette.

You need to prepare: cotton swab

1. Remove all paper in the cassette.
2. Moisten a cotton swab with isopropyl alcohol (95%).
3. Clean the rubber part of the pad.

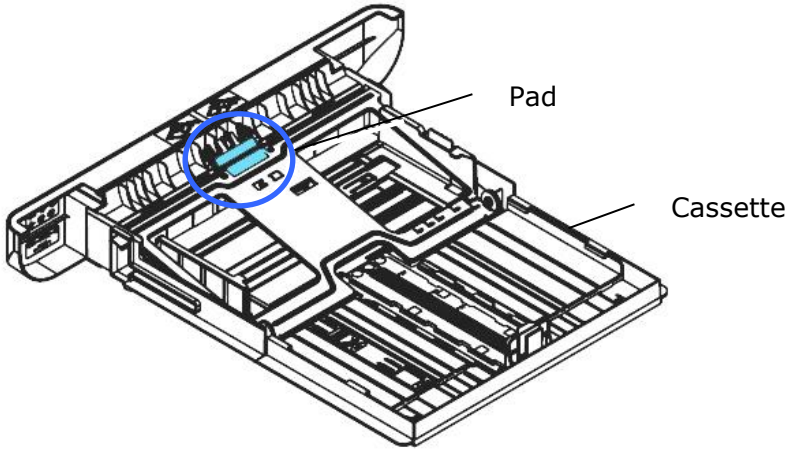

Important:
After cleaning the smeared Pad, dry it completely.

Cleaning the Drum Unit

If the drum unit is smeared with paper powder or dirt, the print out may appear defective image of regular interval. Follow the procedure below to clean the drum unit.

1. Turn off the power and remove the power cord from the power outlet.

2. Open the front cover by pulling the handles on both sides as shown.

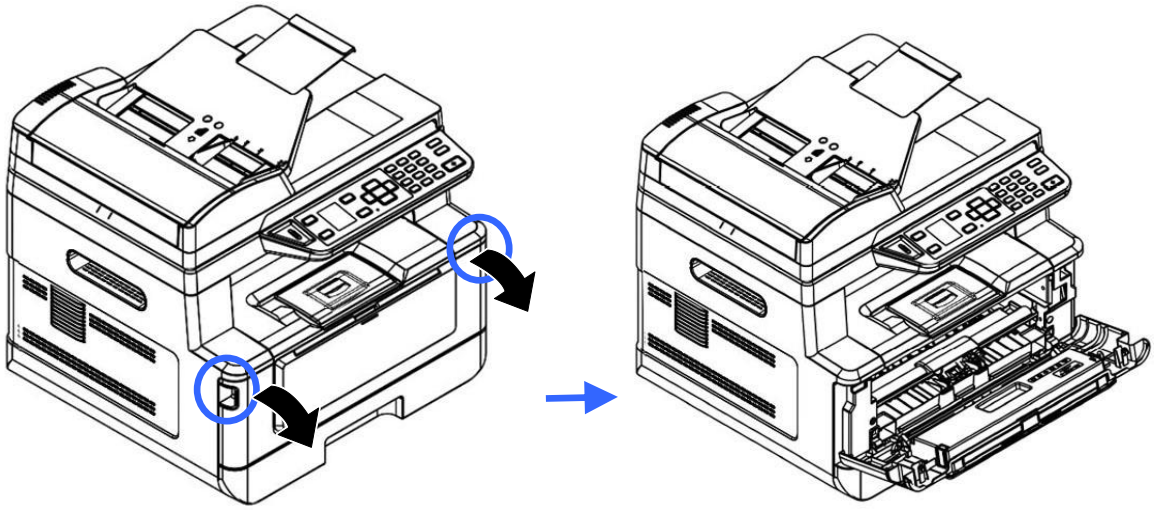

3. Lift the handle of the drum unit and toner cartridge assembly and gently remove the assembly.

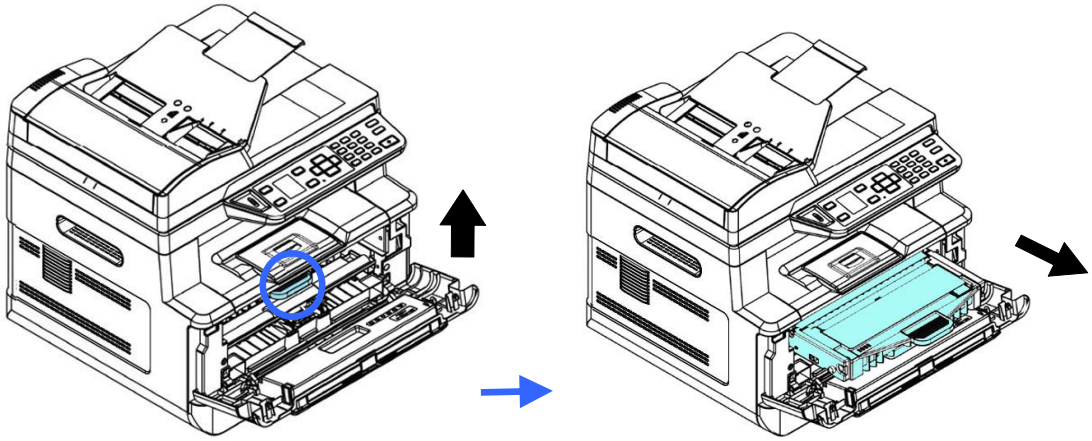

4. Remove the toner cartridge from the drum unit as shown.

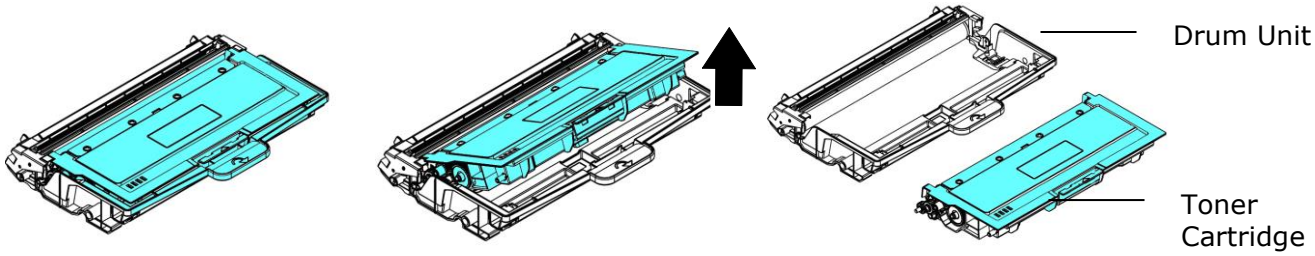

5. Clean the drum unit with a clean and soft cloth.

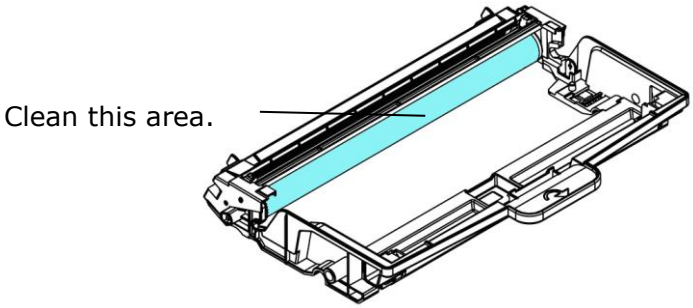

Cleaning the Paper Path

1. Refer to the preceding section to remove the Toner Cartridge.
2. Check if there is paper dust on the Paper Path. If so, remove the dust.

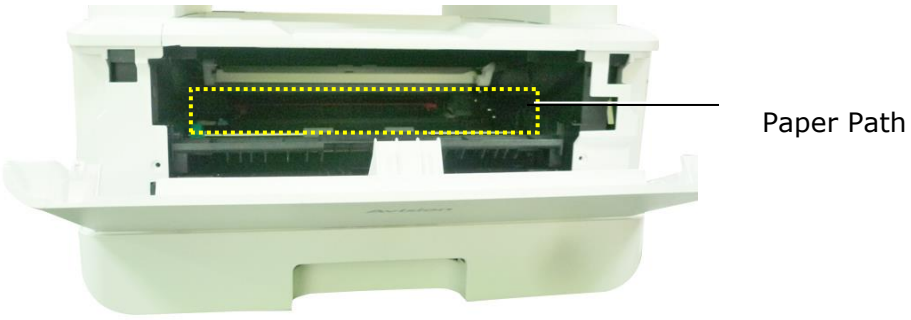

Cleaning the IR Sensors

If too much paper dust or dust accumulates on the IR sensors, it may cause the misjudgment of paper jam. For example, there is error code of paper jam occurs yet in fact no jammed paper found inside the printer. In this case, please clean the IR sensor according to the following steps. If the problem persists, the sensors are probably malfunctioning. Please contact the service personnel to replace the sensor.

1. Refer to the preceding section to remove the Toner Cartridge.
2. Moisten a clean, soft cloth with 95% alcohol.
3. Wipe the area near the sensors as indicated.

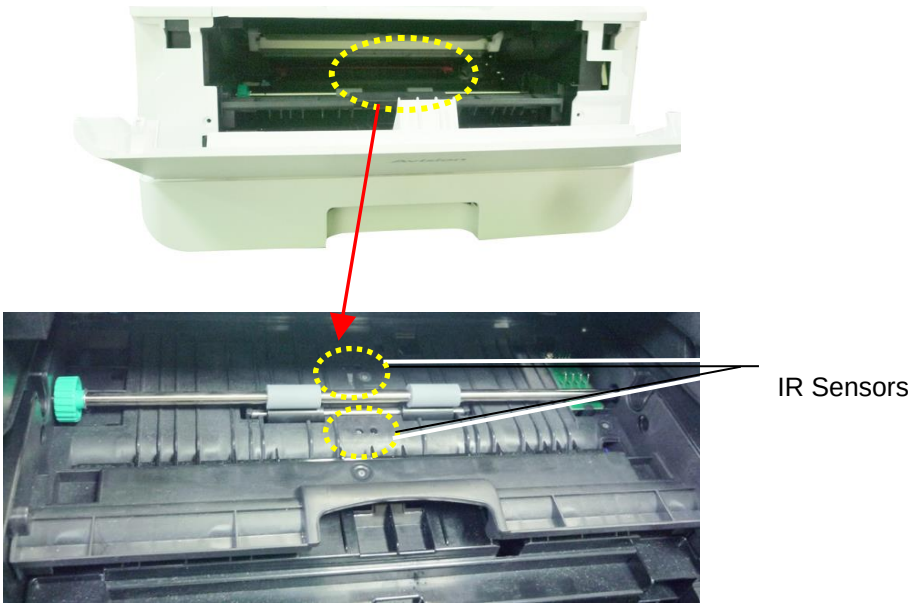

Cleaning the Paper-In Sensors

If too much paper dust or dust accumulates on the Paper-in sensors, it may cause the misjudgment of paper jam. For example, there is error code of paper jam occurs yet in fact no jammed paper found inside the printer. In this case, please clean the Paper-in sensor according to the following steps. If the problem persists, the sensors are probably malfunctioning. Please contact the service personnel to replace the sensor.

1. Turn off the power.
2. Remove the Paper Tray.
3. Moisten a clean, soft cloth with 95% alcohol.
4. Wipe the Back of the sensor board as indicated.

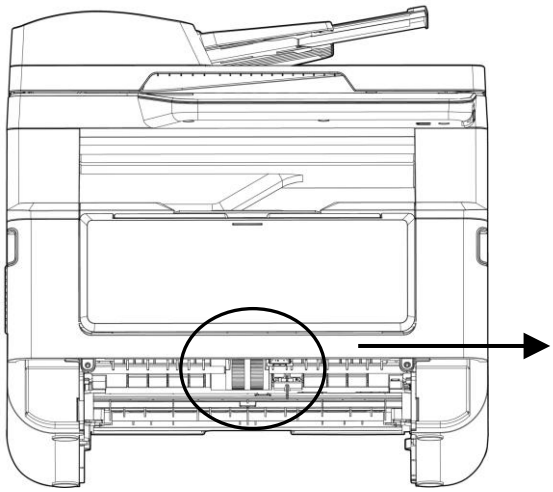

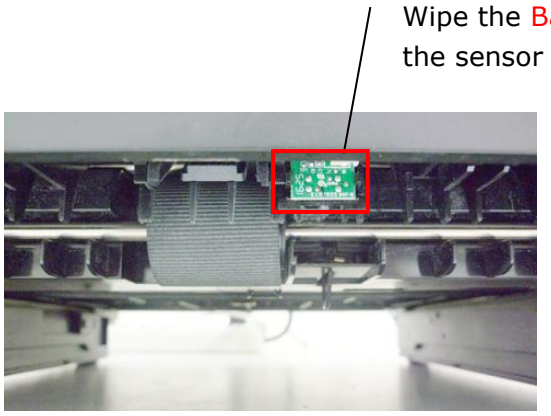

Important!

Before cleaning the paper-in sensor, make sure the power has been turned off and avoid touching the sensor board in case the components of the circuit board may be damaged.

Clearing the ADF Paper Jam

In the event of a paper jam in the ADF, follow the procedures below to remove the paper:

1. Gently open the ADF front cover to the left ❶.
2. Carefully pull the paper out of the ADF unit ❷.
3. Close the ADF front cover. Your product is now ready to use.

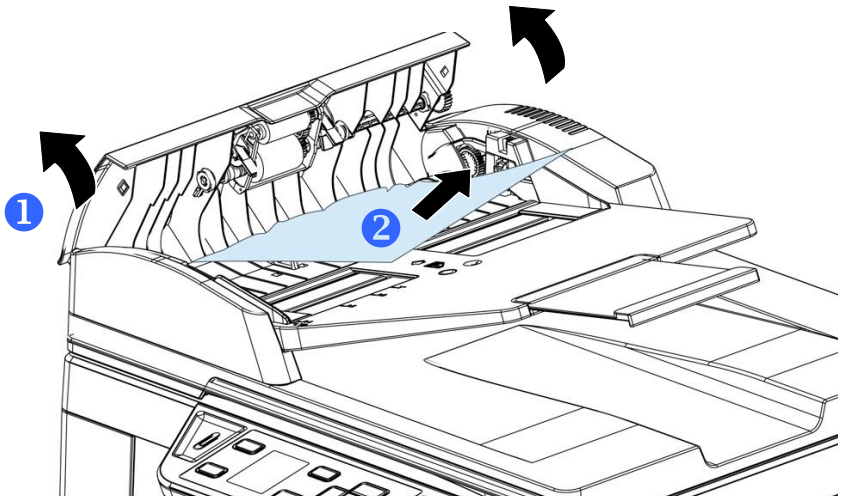

Replacing the Snap-in Pad Module

After scanning about 20,000 sheets through the ADF, the pad may be worn out and you may experience problems with document feeding. In this case, it is highly recommended to replace the pad module with a new one. For ordering the pad module, please consult your nearest dealer and follow the procedure below to replace it.

Disassembling Procedure

1. Gently open the ADF front cover.
2. Remove the ADF snap-in pad module by pressing the lock upward.

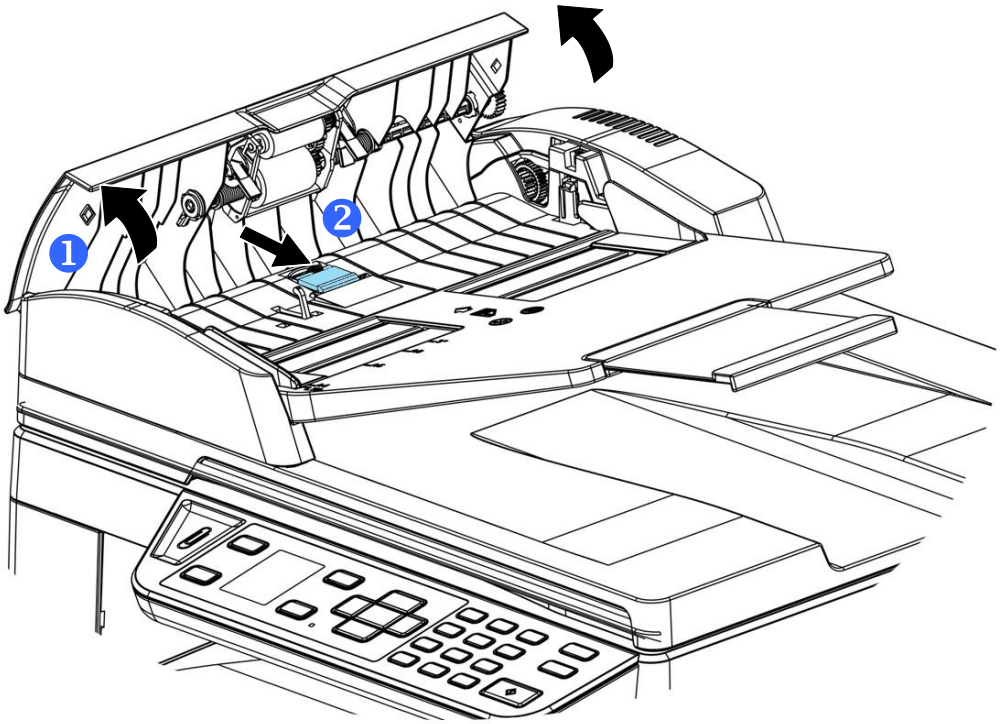

Assembling Procedure

1. Gently open the ADF front cover to the left.
2. Remove the ADF pad module from the box.
3. Place it into the holes until it snaps into place.

Replacing The Toner Cartridge

The toner cartridge that comes with the product needs to be replaced after printing approximately 3,000 pages. When the toner cartridge is running low, you will be prompted with a [**Toner Low**] message. Buy a new toner cartridge and have it ready before you receive [**Replace Toner**] message.

Note:
The drum unit and the toner cartridge are two separate parts.

Follow these steps to replace the toner cartridge:

Removing the Toner Cartridge

1. Turn off the power and remove the power cord from the power outlet.
2. Open the front cover by pulling the handles on both sides as shown.

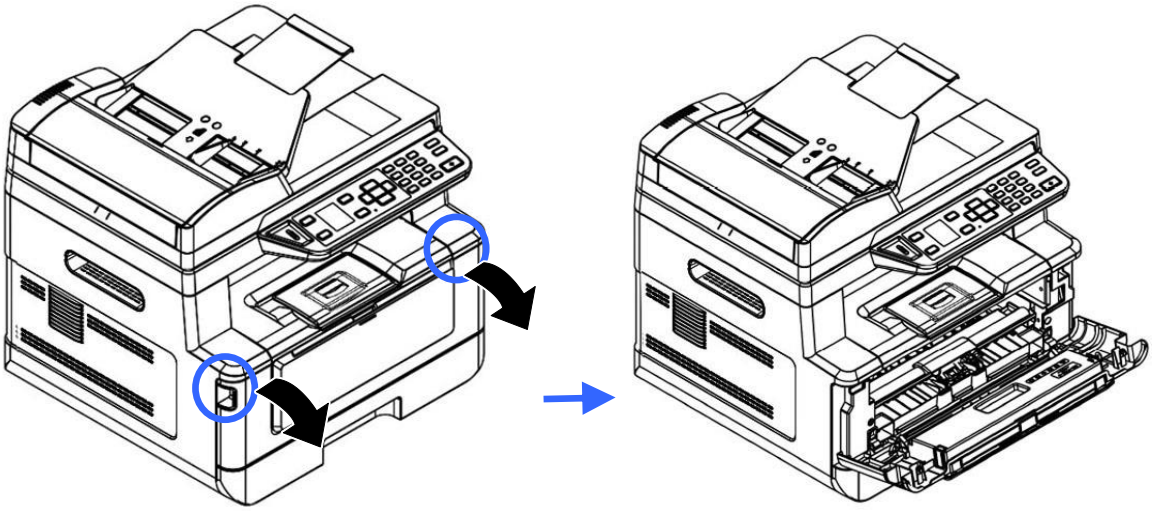

3. Lift the handle of the drum unit and toner cartridge assembly and gently remove the assembly.

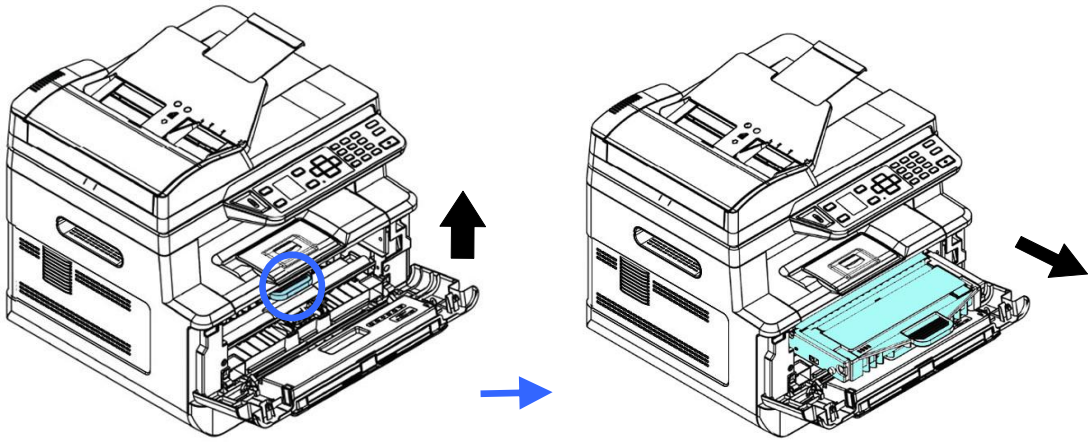

4. Remove the toner cartridge from the drum unit as shown.

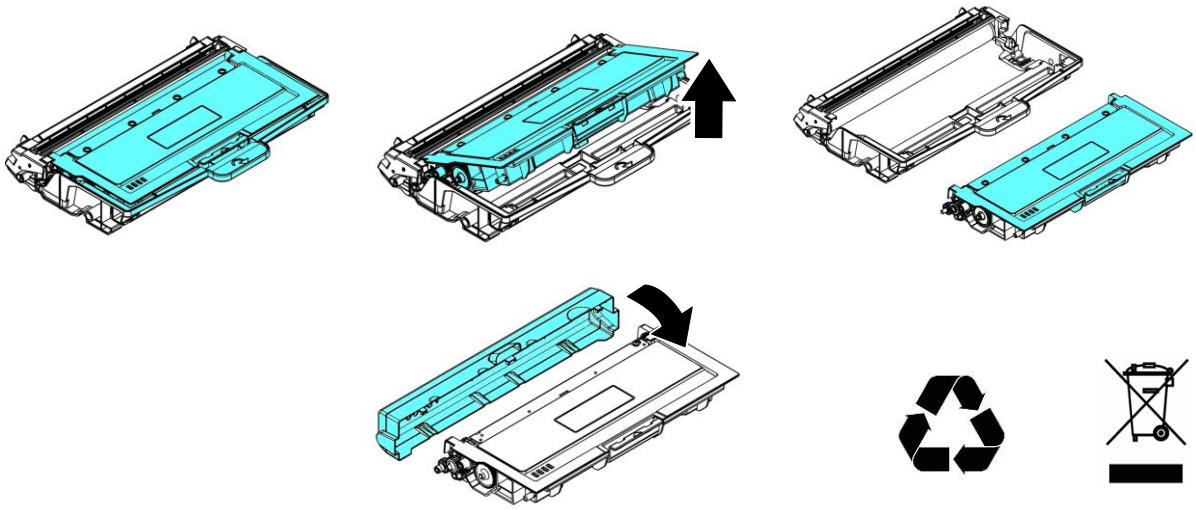

Note:

Do not dispose of the toner cartridge. Put the used toner cartridge into the bundled plastic bag, and then return it to a dealer or service representative. The latter recycles or deals with the collected toner cartridges in accordance with the relevant regulations.

Installing the Toner Cartridge

1. Unpack the new toner cartridge and remove the protective cover.

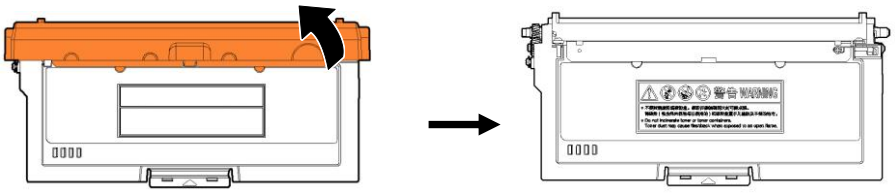

2. Tilt the new toner cartridge up and down and then right and left 10 times to distribute the toner evenly inside the toner cartridge.

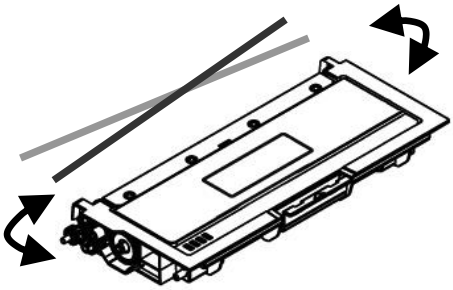

3. Pull out the protective seal of the toner cartridge until it is completely removed.

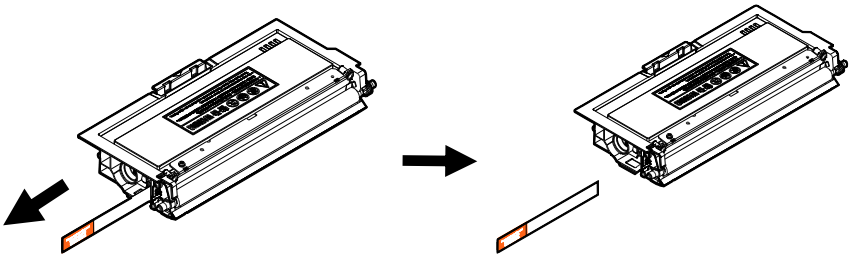

4. Install the new toner cartridge to the drum unit.

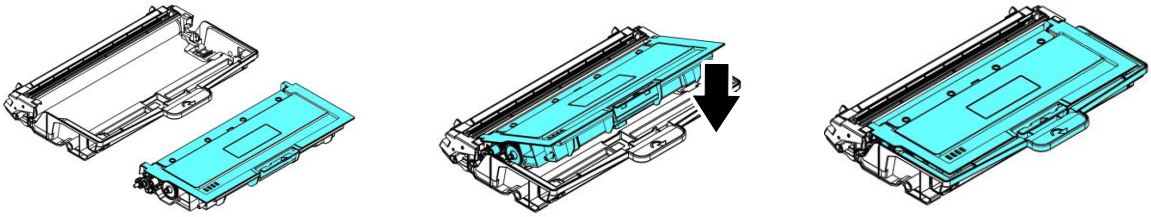

Warning!

- Be careful not to inhale toner.
- To avoid print quality problems, DO NOT touch the toner rollers.
- If toner gets on your clothing or other fabric, wipe off the toner with a dry cloth. Wash the items in cold water and air dry.
- To prevent the toner cartridge from damage, do not expose it more than several minutes.

5. Clean the corona wire inside the drum unit by gently sliding the tab from left to right and right to left for several times. (After the toner cartridge has been used for a period of time, some amounts of toner may remain on the corona wire.)

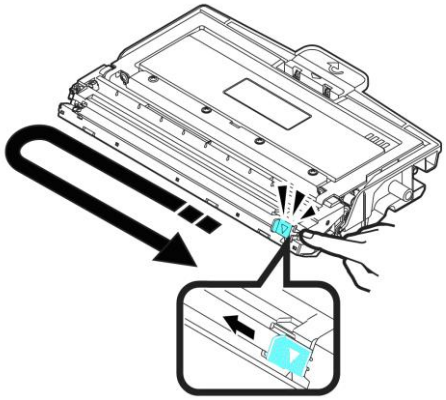

Note:

Be sure to return the tab to the Home position (▲). The arrow on the tab must be aligned with the arrow on the drum unit. If it is not, printed pages may have a vertical stripe.

6. Hold the handle of the toner cartridge assembly and insert the toner cartridge assembly to its original place. Press the handle to fix it firmly in place.

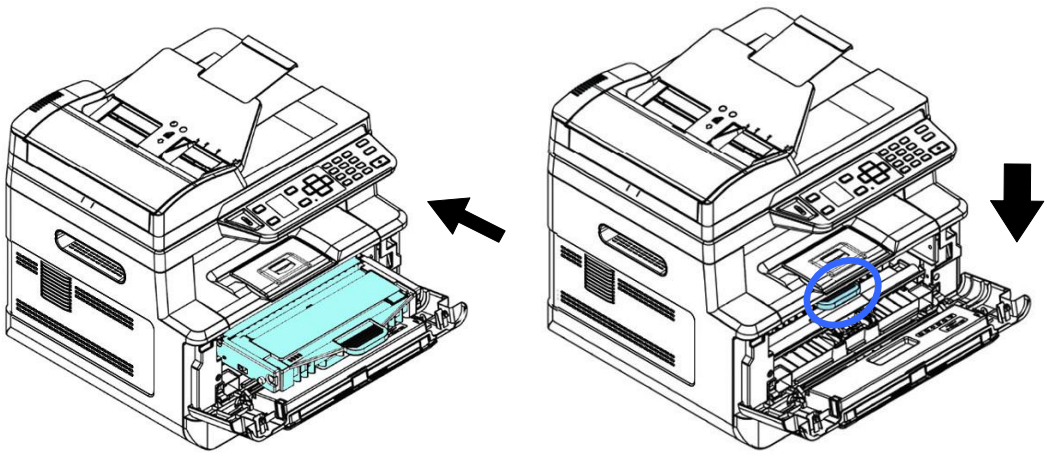

Note:

Do not dispose of the toner cartridge. Put the used toner cartridge into the bundled plastic bag, and then return it to a dealer or service representative. The latter recycles or deals with the collected toner cartridges in accordance with the relevant regulations.

7. Close the front cover.

Replacing The Drum Unit

The drum unit that comes with the product needs to be replaced after printing approximately 30,000 pages. When the drum unit is running low, you will be prompted with a [**Drum Low**] message. Buy a new toner cartridge and have it ready before you receive [**Replace Drum**] message.

Follow these steps to replace the toner cartridge:

Removing the Drum Unit and the Toner Cartridge Assembly

1. Turn off the power and remove the power cable from the power outlet.
2. Open the front cover by pulling the handles on both sides as shown.

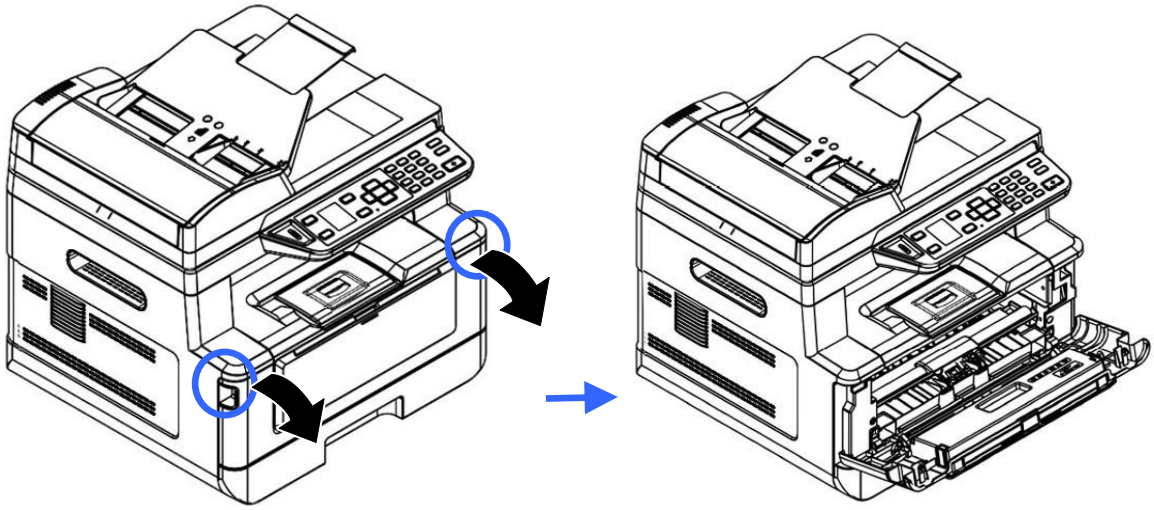

3. Lift the handle of the toner cartridge and gently remove the toner cartridge.

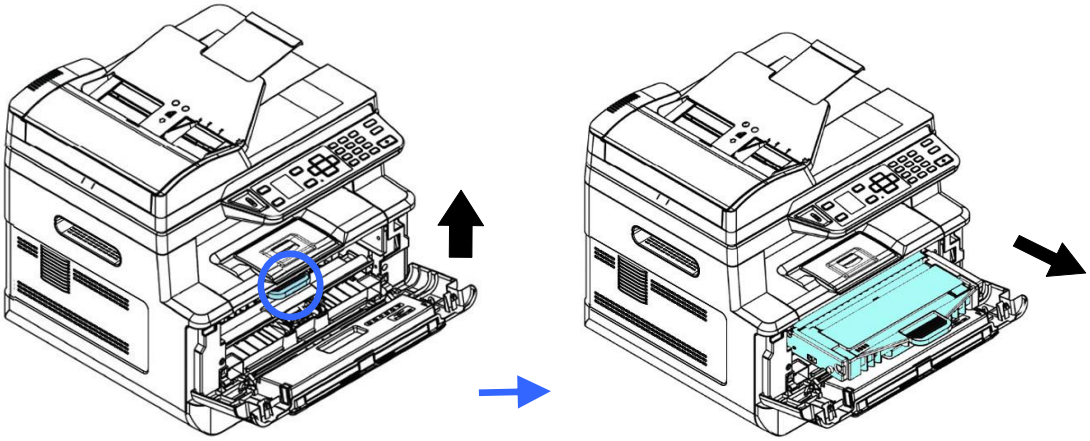

4. Remove the toner cartridge from the drum unit as shown.

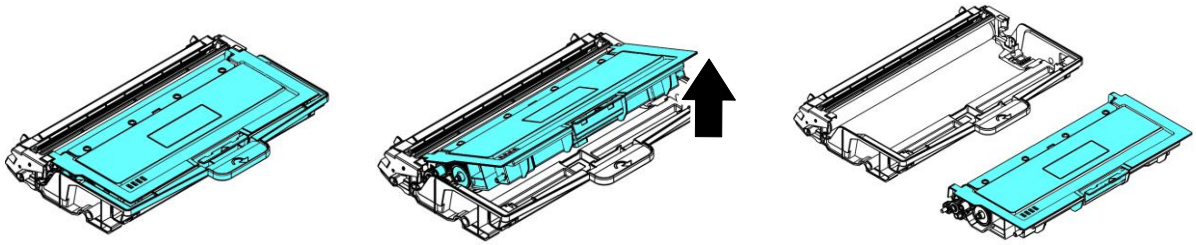

Installing the Drum Unit

1. Remove the protective film and the label in the center of the drum unit. Be sure not to touch the drum during unpacking. Your finger print may effect the print quality.

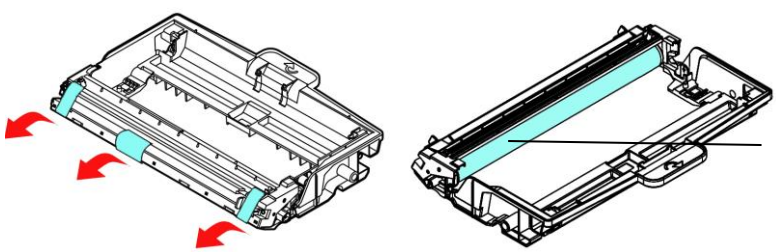



DO NOT touch the surface of the drum.

2. Install the toner cartridge to the new drum unit.

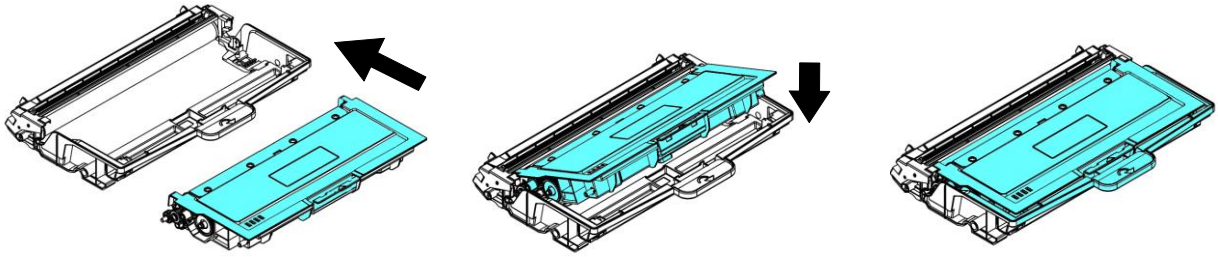

3. Hold the handle of the toner cartridge and insert the toner cartridge into its original position. Press the handle to secure it firmly in position.

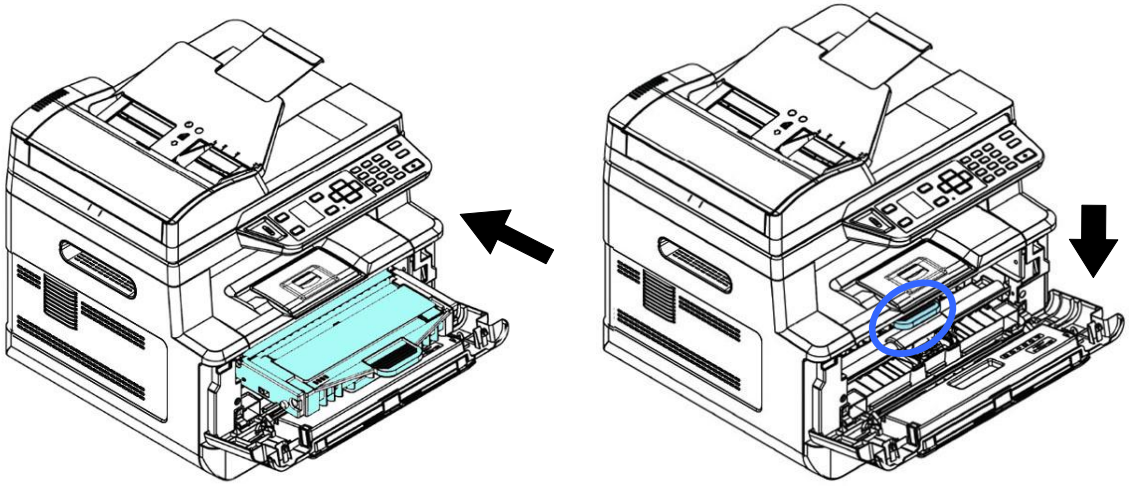

3. Close the front cover.

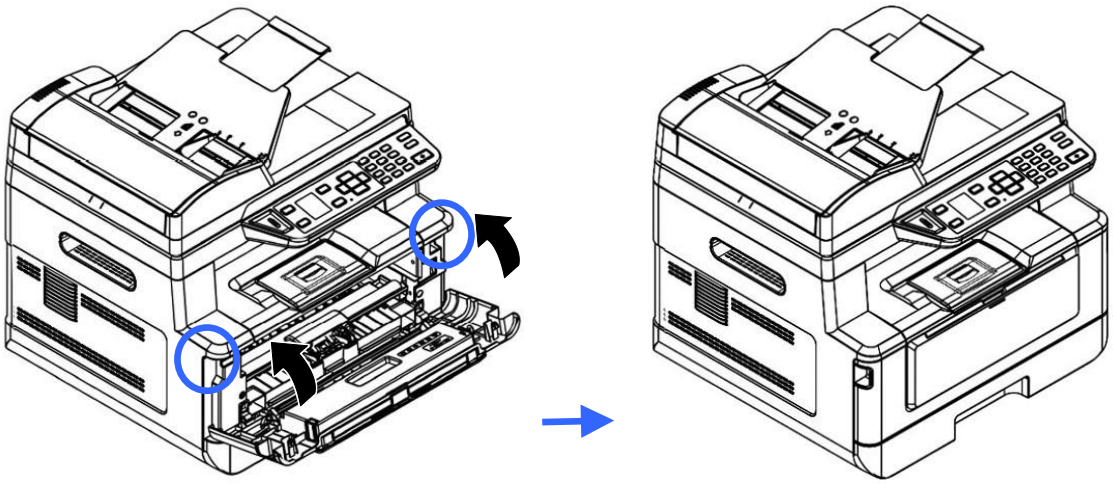

10. Troubleshooting

Monitoring Your Printer Using Printer Status Monitor

Printer Status Monitor allows you to monitor your printer's status, get information on consumable parts, and alerts you when printer errors occur.

Printer Status Monitor is available when the printer is connected directly to a host computer via the USB port or a network port. Printer Status Monitor is installed when you install the printer driver as described in the preceding section.

Accessing Printer Status Monitor

Double-click the **Printer Status Monitor** icon on the system tray. The following printer status window appears.

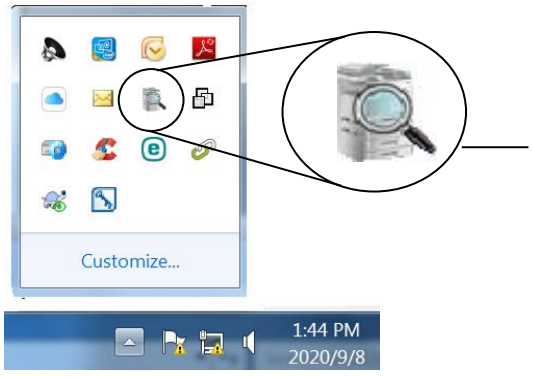

Printer Status Monitor icon

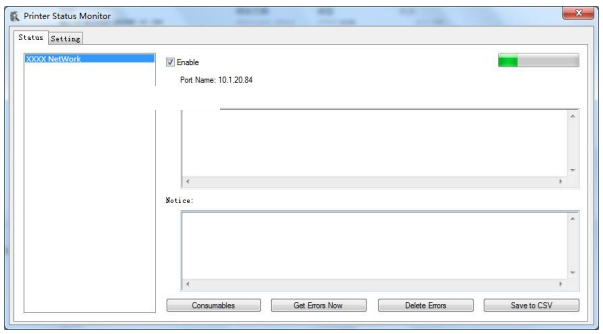

Printer Status Window

Getting Printer Status Details

You can monitor printer status and get information on consumable products using the Printer Status Monitor dialog box.

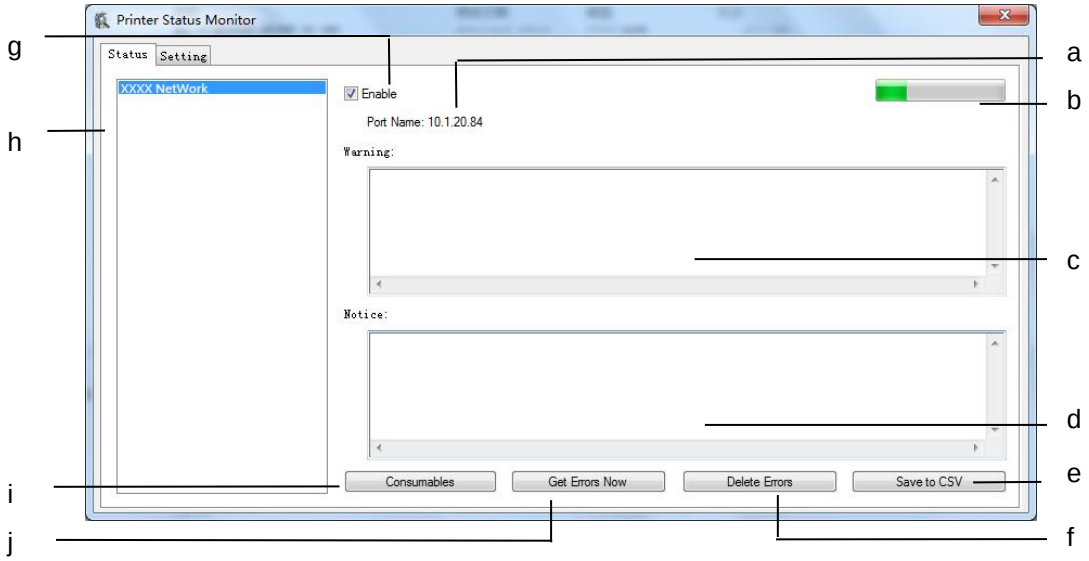

a Port Name	Port name for the specified printer.
b Progress Bar	The progress bar to access the latest data of the specified printer.
c Text Box	Display the warning message.
d Text Box	Display the notice message.
e Save Errors to CSV	Save error message to a CSV file.
f Delete Errors	Delete all the error messages.
g Enable	Check the box to enable accessing the status of a specified printer.
h Printer	Display connected printers.
i Consumables	Click to show the information of the paper tray and the consumables parts such as Drum(EP), Toner.
j Get Errors Now	Refresh the printer status.

Setting Monitoring Preferences

To make specific monitoring settings, click the Setting tab on the Printer Status Monitor window.

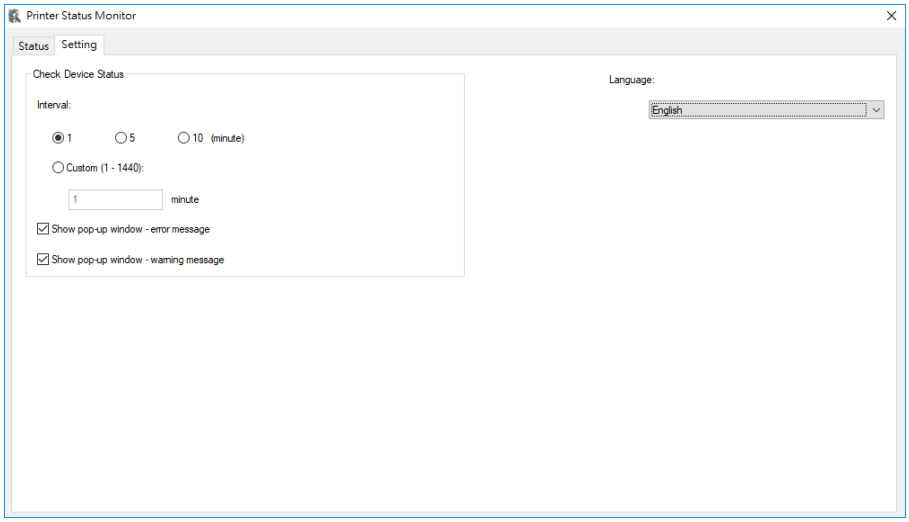

Language	Displays the language of the window.
Status Alert Update Time	Define the interval to refresh the printer error status. Choice: 1, 5, 10 (minute), Custom (1 ~ 1440) minute
Show pop-up Window- error message	Check this box to show the error message.
Show pop-up window-warning message	Check this box to show the warning message.

Clearing A Warning or Error Message

If a problem occurs during operation, a warning or error message and QR code will display on the LCD panel. In addition, the Error LED will be flashing or solidly lit to indicate a warning or an error status. To solve the problem, please follow the on-screen instruction and the following table for more detailed information or use your mobile phone to scan and view the troubleshooting video.

Warning Message

Message	Description or Solution
Auto Temp. Adjust (200004)	Auto Temperature Adjustment. Please wait. The temperature inside the printer is too high. To avoid damaging the toner, the print job is suspended for a few minutes. After the temperature returns to the normal degrees, the warning message will then disappear and the print job will continue.
Toner low (200032).	Toner that remains is lower than 10%. The machine can still perform printing or copying function yet with poor quality.
Drum unit near end (200043).	Drum unit that remains is lower than 10%. Call the service personnel to order and replace the EP.
Toner empty (200031)	Toner has run out. Replace a new toner cartridge.
No Drum unit (200041)	Please install Drum unit and restart MFP.
Drum unit life ends (200042)	**Drum unit** life has been exhausted. Call the service personnel to order and replace the EP module.

Error Message

Error Message and Codes	Possible Causes or Solution
System error	
Service code: 100111	Restart MFP. If this error persists, call service personnel for help.
Scan module error (000113) Restart MFP or call service.	An unexpected error from scanner parts occurs. Restart MFP or call service to replace scanner parts that fail.
ADF cover opens. Close ADF cover.(002014)	Close ADF cover.
Printer module error. Please restart MFP or call service (205000, 205001).	An unexpected error from printer parts occurs. Restart MFP or call service personnel to replace printer parts that fail.
Printer module error. Please clean corona wire and restart MFP or call service (205101).	An unexpected error from printer parts occurs. Please clean corona wire and restart MFP or call service personnel to replace printer parts that fail.
Motor error (000001). Press # button to erase or call service.	When MFP is booted, the scanner and printer engine Initialization fail. Restart MFP.
Scanner lamp error (002007). Please close flatbed cover and Press # button to erase or call service.	The CIS lamp is damaged or not lit. Call service personnel to replace the CIS unit.
Fan fails (200090).	Call service personnel to replace the fan.
Front cover opens (200051).	Please close front cover.
Rear cover opens (200054).	Please close rear cover.
Continue feed error (200000).	Please open front cover to clear the paper and load paper to proper tray.
Fuser error (201600, 201604~5, 201613, 201615~201618, 201621~201623)	Please restart MFP. If the error persists, call service personnel for help.
Please open rear cover (200002).	The rear cover has to be opened when bond, card, or transparency is selected as media type.

Please load paper in manual tray (200080).	Paper empty in the manual tray.
Please check tray 1 and press OK (200003).	Pick up error. Paper empty, paper jam, or pickup failed in tray 1.
Please load paper to tray1 (200081)	Tray 1 paper empty.
DHCP no response (500002). Please check network settings.	Check network settings.
USB flash disk not found.	Insert USB flash drive to the USB flash port.
USB flash disk connection fails. Job abort.	Check the connection of USB flash drive.
MFP not ready. Try again later.	MFP is busy with current job. Wait until current job is completed.
Buffer full Job abort.	Memory is not enough to process the scanned images.
Buffer full Print scanned images：1 Cancel job：2	Memory is not enough to process the scanned images. Press [1] to print the first few images which have not exceeded the memory limit or press [2] to cancel job.
Resetting default settings fails. Please try again later.	Resetting default settings.
Scanner Calibration fails. Please try again later.	Please try again by pressing the Menu button and then choosing System>Management>Calibration.
Reset count fail. Please try again later.	Please try again by pressing the Menu button and then choosing System>Management>Reset count.
Setting fails. Please try again later.	Setting the Menu option fails. Check your setting.
Full page not support N in 1	The Full page feature does not support N in 1 (2 in 1 or 4 in 1).
Custom zoom not support N in 1	The Custom Zoom feature does not support N in 1 (2 in 1 or 4 in 1).

Paper Jam
ADF paper jam (002013). 1. Open ADF cover and clear paper. 2. Close ADF cover.
Paper feed failed (200301). Please check manual tray.
Paper feed failed (200302). Please check tray 1 and clear the jammed paper.
Paper jam (200324). Please open front cover and tray 1 to clear jam paper.
Paper jam (200325). Please open front cover and pull drum unit out to clear jam paper.
Paper jam (200326). Please open front cover and pull drum unit out to clear jam paper.
Paper jam (200327). Please open front cover and pull drum unit out to clear jam paper.
Paper jam (200328). Please open front cover and pull drum unit out to clear jam paper.
Paper jam (200329). Please open front cover and pull drum unit out to clear jam paper.
Paper jam (200330). Please open front cover and rear cover to clear jam paper.
Paper jam (200331). Please open front cover and rear cover to clear jam paper.
Paper jam (200332). Please open front cover and rear cover to clear jam paper.
Paper jam (200333). Please open front cover and rear cover to clear jam paper.
Paper jam (200334). Please check the duplex tray and open front cover and rear cover to clear the jam paper.
Paper jam (200335). Please check the duplex tray and open front cover and rear cover to clear the jam paper.

Locations of the Jammed Paper	
Front Cover: Open the front cover by pulling the handles of the front cover on both sides as illustrated. 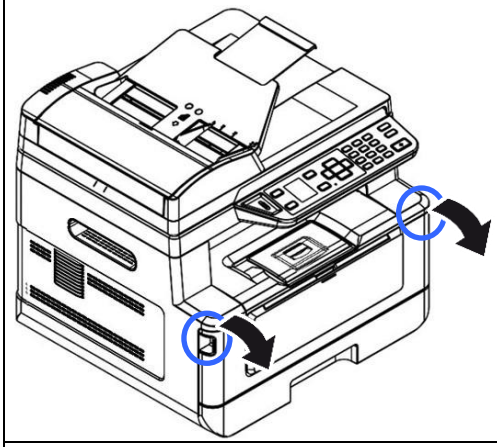	**Rear Cover**: Open the rear cover by pulling the handle of the rear cover as shown. 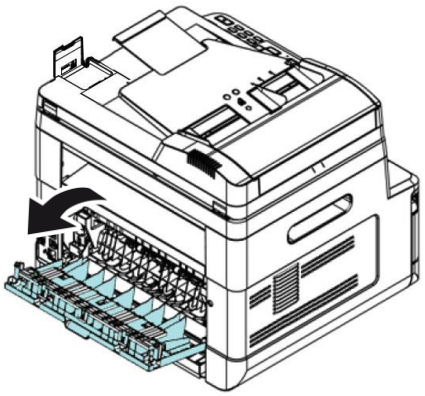
Duplex tray: Pull the duplex tray beneath the rear cover out of the main unit. 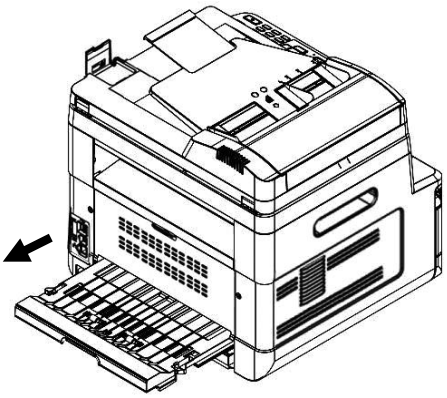	Manual tray: Open the manual tray by grasping the handle and pull it down. 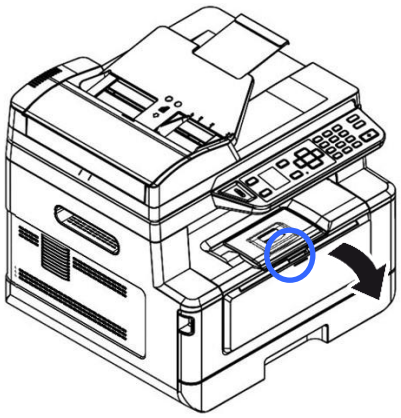

Fuser:

The area around the fuser is hot. To avoid a burn injury, be careful not to touch the fuser until it cools down and follow these steps to remove the jammed paper:

1. Open the **Front Cover** and the **Rear Cover**.

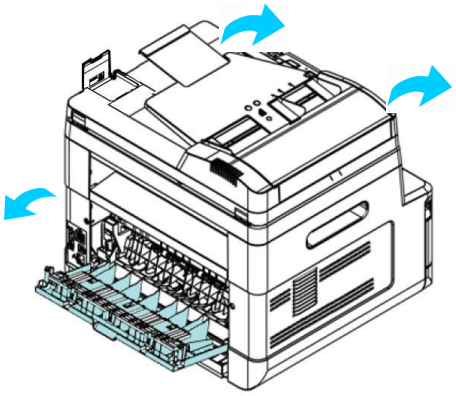

2. Pull down the **Fuser Path** as indicated.

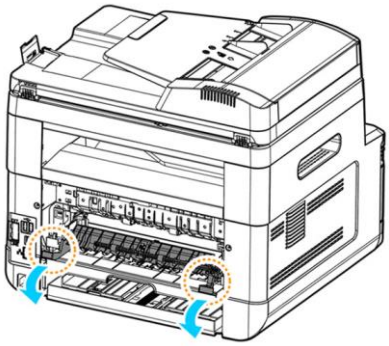

3. Pull down the **Release Arm** on both sides.

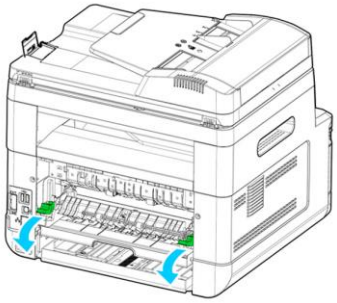

4. Slowly remove the jammed paper.

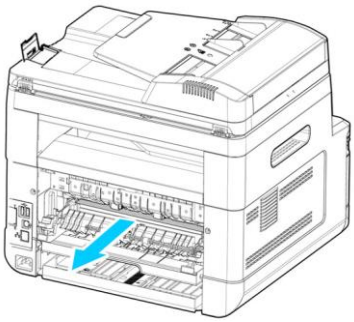

5. If there is difficulty to pull off the jammed paper, remove the printer cartridge first.

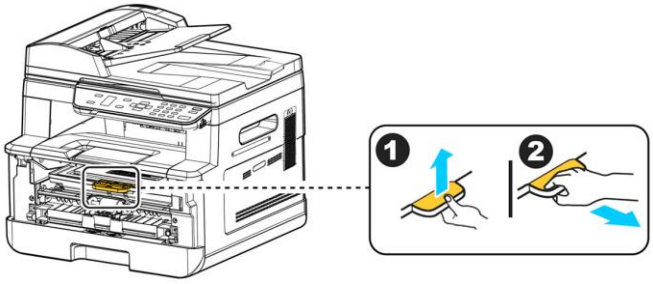

6. Rotate the Release Wheel to slowly pull out the jammed paper.

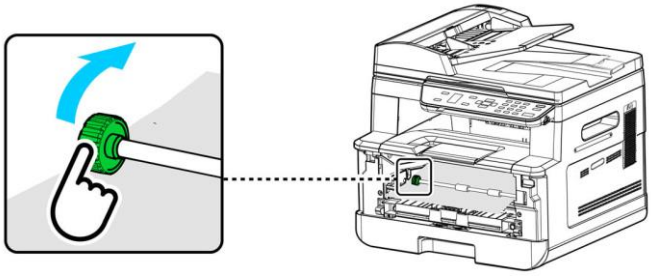

Sending to FTP/CIFS Errors	
Invalid login name or password.	Please check your login name or password on the product's web page.
Connection failed. Unable to connect to server.	Connection fails during scan to FTP/CIFS. Check network environment or tray again later.
JPEG not support Black&White	JPEG file format does not support black and white image mode.
E-Mail Errors	
Exceed allowable limit.	E-mail recipients exceed allowable number (5).
No recipients added. Please add recipients before pressing start.	Enter your recipient.
No from address added.	Please add address in the [From] field, before pressing start.
File name is existed. Job abort.	File name for the scanned image existed. Change your file name.
JPEG not support Black&White	JPEG file format does not support black and white image mode.
No entries found. Please modify your search entry.	
Unknown error.	Restart MFP. If this error persists, call service personnel for help.

Error Message and Codes	Possible Causes or Solution
System error	
Error (Number).	Restart MFP. If this error persists, call service personnel for help.
300100	Printer API_NVRAM_RW_TEST_FAIL
300101	Printer API_NVRAM_WRITE_FAIL
300102	Printer API_NVRAM_READ_FAIL
300200	Printer Flash Error
300201	Printer FLASH_BLOCK_ERASE_FAILED
300202	Printer FLASH_CHIP_ERASE_FAILED
300203	Printer FLASH_PROGRAM_FAILED
201631	Printer runtime error.
201632	Printer runtime error.
201650	Printer runtime error.
201651	Firmware error.
201701	Printer MB NVRAM：reading error
201702	Printer MB NVRAM：writing error
201703	Printer MB NVRAM：reading error while comparing
201704	Printer MB NVRAM：comparing error
201711	Printer Drum Unit NVRAM：reading error
201712	Printer Drum Unit NVRAM：writing error
201713	Printer Drum Unit NVRAM：reading error
201714	Printer Drum Unit NVRAM：comparing error
201721	Printer Toner NVRAM：reading error
201722	Printer Toner NVRAM：writing error
201723	Printer Toner NVRAM：reading error while comparing
201724	Printer Toner NVRAM：comparing error
201730	Printer uses wrong NVRAM Address.
302651	Network_INIT_FAIL , network initialization fails.

Problem	Image Example	Solution
Paper curls		1. Use paper of standard weight: If you are using thin paper, try to use paper of standard weight (80 g/m^2). 2. Use paper with less moisture: Load the paper to the paper tray immediately after removing them from the packaging. Seal the remaining paper with the original packaging to keep from the moisture absorption.
Light print(entire page)	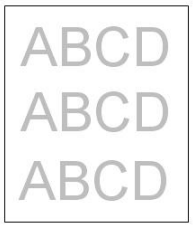	1. Make sure that the toner cartridge is fully installed. 2. Make sure that the Toner Save setting is turned off in the printer driver. 3. Try using a different type of paper. 4. The toner cartridge might be almost empty. Replace the toner cartridge.
Light print(partial page)	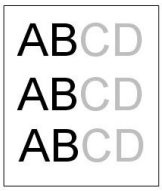	1. Make sure that the toner cartridge is fully installed. 2. The toner level might be low. Replace the toner cartridge. 3. The paper might not meet the printer's specifications (for example, the paper is too moist or too rough).
Vertical white lines	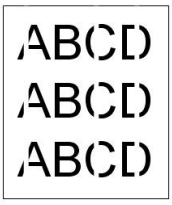	Call the service personnel for help.
Vertical black lines	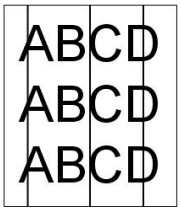	Please clean the EP charger (corona wire) according to the procedure described in this manual on page 163.

Problem	Image Example	Solution
Dirty background(partial page)	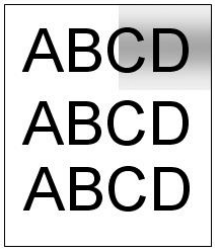	Check if toner is not leaked from the toner cartridge. If so, replace the toner cartridge.
Dirty background(entire page)	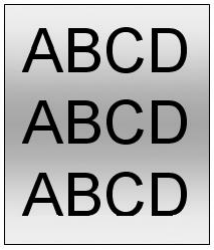	1. The paper might not meet the printer's specifications (for example, the paper is too thin). 2. Check if there is enough toner in the toner cartridge. If not, please replace the toner cartridge. 3. Call the service personnel for help.
Print blank page	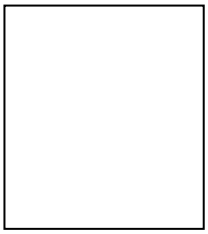	Check if there is enough toner in the toner cartridge. If not, please replace the toner cartridge. If this error happens again, call service for help.
Defective image of regular interval	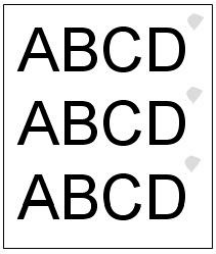	1. Clean the drum unit with a soft and clean cloth (See p. 152). 2. If this error hapeens again, call service for help. 2.
Loose toner	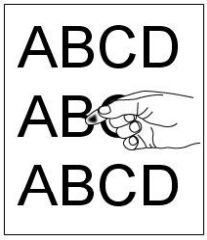	1. If you have observed a rougher texture on one side of your paper, try printing on the smoother side. 2. The paper might not meet the printer's specifications (for example, the paper surface is not smooth or paper too thick). 3. Media type incorrect. Please choose proper media type for your paper.

Black line on edge	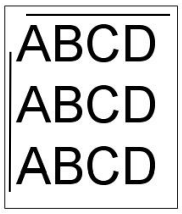	The image is slightly skew. Make sure the edge of your document is properly aligned and slightly touch the paper guides in the auto document feeder.

Technical Support

If your problem still exists after trying the above solution, please contact Capsul's Technical Support team or one of our authorized distributors.

Capsul Technical Support
Capsul
Email: support@capsuloffice.com
Website: https://capsuloffice.com/support

Image Star, Authorized Distributor for North America
Image Star LLC
35 Philmack Drive, Suite A200, Middletown, CT 06457, United States
TEL: +1 (888) 632-5515
Email: customerservice@imagestar.com
Website: https://imagestar.site

11. Specifications

All specifications are subject to change without notice. For detailed specifications, please refer to our web site at https://www.capsuloffice.com

General	
Type	MFP
Functions	Copier-Printer-Scanner-E-mail
Dimension (WxDxH)	404 x 380 x 366 mm
Weight	10.7 kg
Max paper capacity	250 (main tray) (70 g/m^2) 10 (manual tray) (70 g/m^2) 50 (Auto Document Feeder) (70 g/m^2)
LCM	1.77 in. TFT
Connectivity	Hi-speed USB 2.0 10/100 Base-T Ethernet

		Wi-Fi: 802.11 b/g/n (For the model supports Wi-Fi)
Opearating Environment	Temperature	10°C ~ 32°C
	Humidty	15% ~ 80% RH
Storing Environment	Temperature	-40°C ~ 65°C
	Humidty	10% ~ 90% RH
Current consumption		110~127Vac, 50/60Hz,9.5A Or 220~240Vac, 50/60Hz, 4.5A
Toner cartridge lifetime		**3,000 prints
Drum unit lifetime		*30,000 prints
Product Lifetime		60,000 prints

*Drum yield is based on 3 pages per job [letter/A4 simplex].

The number of pages maybe affected due to the media type or paper size.

**Declared cartridge yield in accordance with ISO/IEC 19752

Copy Functions	
Copy size	Legal, Letter, A4, A5
Max. copy size	Legal (216 x 356 mm) (ADF) A4 (216 x 297) (Flatbed)
Min. copy size	76 x 127 mm
Copy count	up to 99, Auto Reset to 1
Zoom	25 ~ 400%
N-up copy	2 in1 / 4 in 1 / ID card
Copy mode	Text/Mixed/Bill
Print Function	
Printing method	Mono Laser
Printing speed	33 ppm (A4)
Max print size	216 x 356 mm (8 x 14 in.)
Min print size	76 x 127 mm
Resolution	1200 x 1200 dpi
PDLs/Emulations	GDI/PCL
First print out time	<11 seconds
Edge erase	4.3 mm (top, bottom, left, right)
Scaling	25 ~ 400%
Duplex print	Yes
Network print	Yes
Scan Function	
Scanner type	Flatbed/ADF/CIS type
Max. scanning size	Legal (216 x 356 mm) (ADF) A4 (216 x 297 mm) (Flatbed)
Min. scan size	76 x 127 mm
Optical resolution	1200 x 1200 dpi
Scanning bit depth	Color - 24bit(output)/48bit (input) Gray - 8bit(output)/16bit (input) B/W - 1bit
File format	Color/Gray - JPEG, M-PDF, PDF, TIFF B/W - PDF, M-PDF, TIFF
Scan to Destinations	Scan to E-mail, Scan to FTP/CIFS, Scan to USB flash drive (partition type FAT16/FAT32)

Wi-Fi Specifications:

The model (CF-811AC/CF-WU810N) of Wi-Fi module varies according to countries/regions.

Model: CF-811AC

Main Chipset	RTL8811CU
Host Interface	USB 2.0
Frequency Range	2.4GHz/5.8GHz Dual-Channel
Wi-Fi Standard	IEEE802.11a
	IEEE802.11b
	IEEE802.11g
	IEEE802.11n
	IEEE802.11ac
Transmit Speed	11b：1/2/5.5/11Mbps
	11g：6/9/12/18/24/36/48/54Mbps
	11n：200Mbps
	11ac：433Mbps
Transmit Power	Max. 17 dBm
Security	WPA-PSK/WPA2-PSK
	WPA/WPA2
	WEP
Operating System	Windows XP/Vista/7/8/8.1/10 (32/64 bit)
	MacOS10.6~MacOS10.15

Model: CF-WU810N

Main Chipset	RTL8188EUS
Host interface	USB 2.0
Frequency Range	2.412~2.484 GHz
Wi-Fi Standard	IEEE 802.11b IEEE 802.11g IEEE 802.11n
Transmit Speed	11b: 1/2/5.5/11 Mbps 11g: 6/9/12/24/36/48/54 Mbps 11n: 150 Mbps
Transmit Power	Max. 18 dBm
Security	WPA-PSK/WPA2-PSK WPA/WPA2 WEP
Operating System	Windows XP/Vista/7/8/8.1/10 (32/64 bit) Max OS 10.6 ~10.11 Linux Kernel 2.6.18~3.10